## CIRCUIT FUNCTION OF THE PRINTED CIRCUIT BOARD

The Circuit Board Information is Provided Below

| SYSTEM | BOARD | CIRCUIT FUNCTION |
|---|---|---|
| VIDEO | VO-9 | *Luminance and Chrominance Signal Modulator/Demodulator |
| | | |
| AUDIO | AH-3 | *Audio REC/PB/ERASE and CTL REC/PB Head |
| | AU-28 | *Audio REC/PB Amplifier<br>*Bias/Erase Oscillator |
| | EC-19 | *Full Erase Head |
| | HP-6 | *Headphones Jack/Level Control |
| | MC-14 | *Audio Meter/Level and Tracking Control |
| | MI-5 | *CH-1/CH-2 Mic Input |
| | | |
| SERVO | DR-17 | *Drum/Capstan Driver |
| | SV-44 | *Drum/Capstan Speed and Phase PWM Servo |
| | | |
| POWER | AC-26 | *AC input |
| | DC-13 | *Power Supply/Regulator |
| | UR-01 | *Switching Regulator |
| | | |
| SYSTEM CONTROL | CC-9 | *Cassette Compartment Motor/Pilot Lamp |
| | CC-10 | *Cassette In Detector |
| | CC-11 | *Cassette Down Detector |
| | CN-42 | *Connection Board |
| | FR-11 | *Threading Ring Mechanical Position Detector |
| | KY-21 | *Function Key Board<br>*Display Driver<br>*Mode/Input/Monitor Select |
| | LM-9 | *Threading Motor |
| | MR-8<br>MR-11A | *Threading/CC Motor Driver<br>*Reel Motor Control/Driver<br>*Skew/Search/Pinch Solenoid Driver |
| | PD-16A | *Take up Idler/Brake Supply Idler/Brake Driver |
| | PH-4 | *Tension Regulator |
| | PH-5 | *Tape End/Tape Beginning Sensor |
| | PT-9 | *Reel Motor Power Driver |
| | SW-43 | *Supply/Take up Rotation Detecter |
| | SW-46 | *Miss Rec Detector |
| | SW-50 | *FR Unthread End Detector |
| | SY-75 | *System Control |

## OVERALL BLOCK DIAGRAM

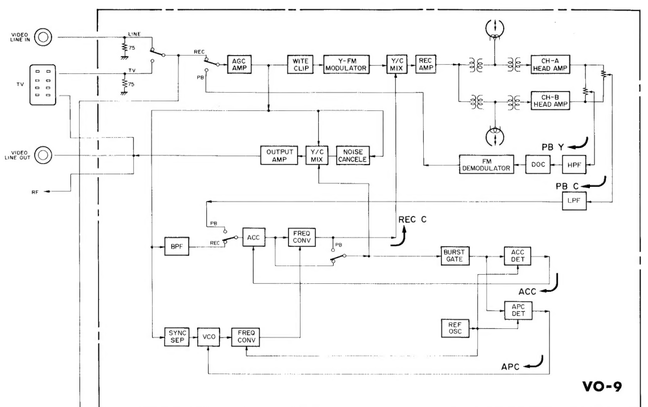


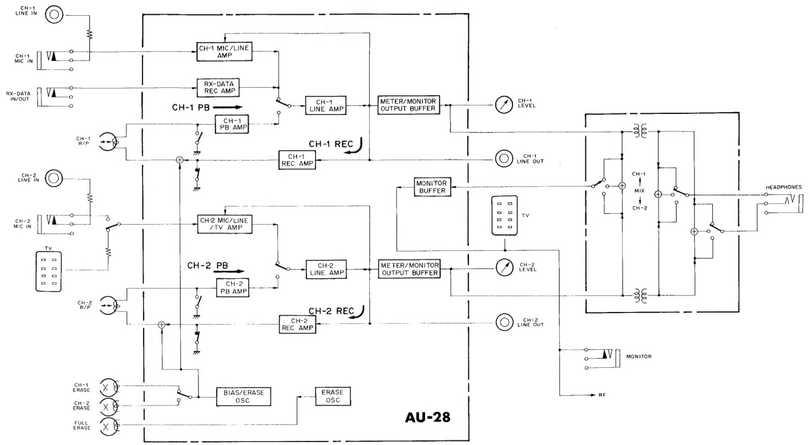


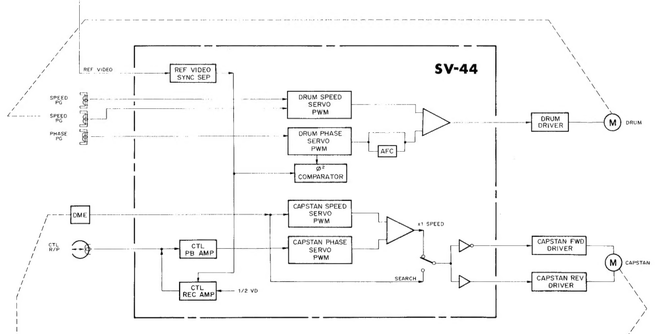


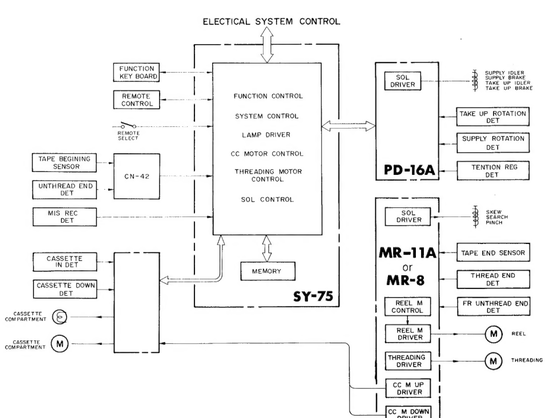

## VIDEO SYSTEM BLOCK DIAGRAM

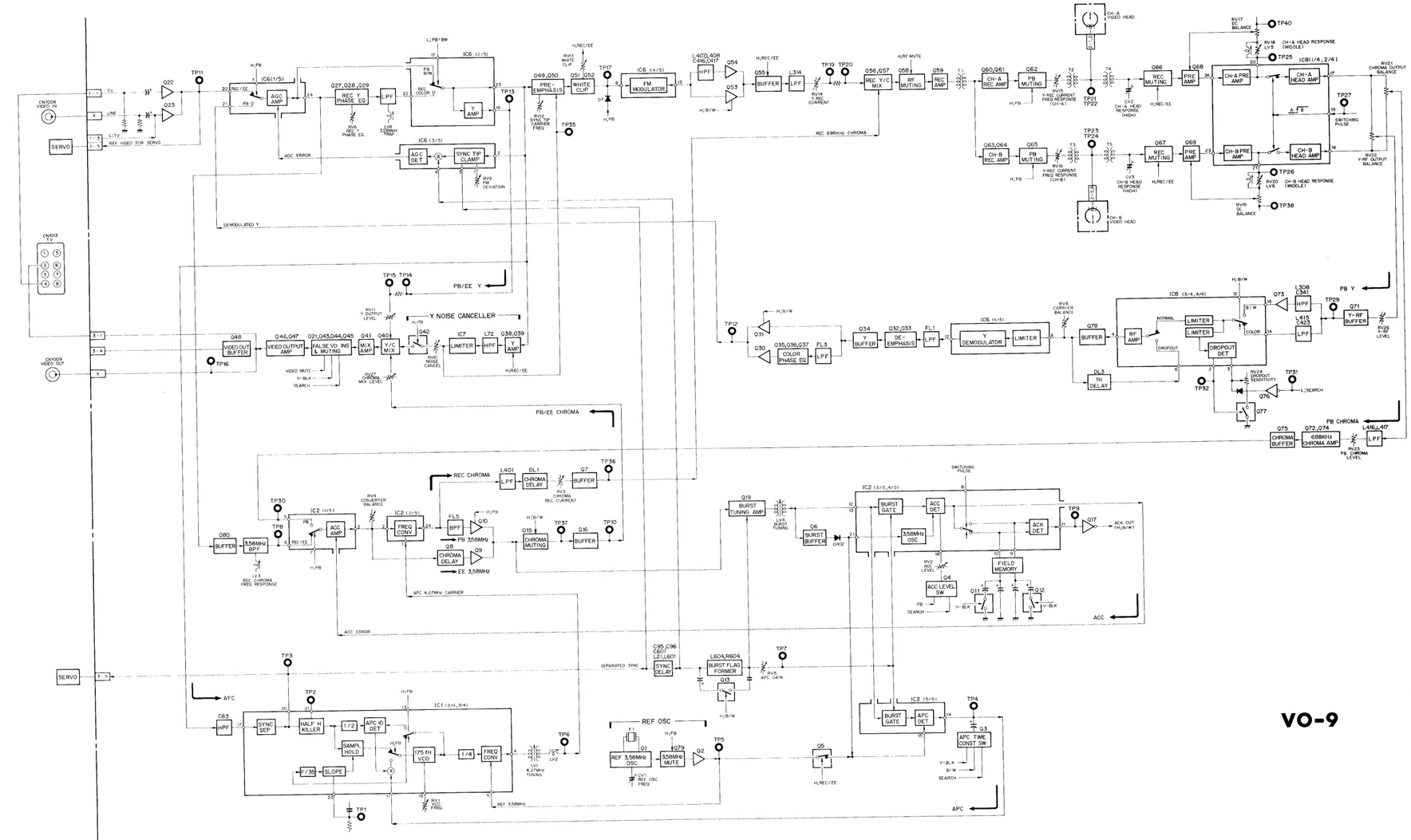

## AUDIO SYSTEM BLOCK DIAGRAM

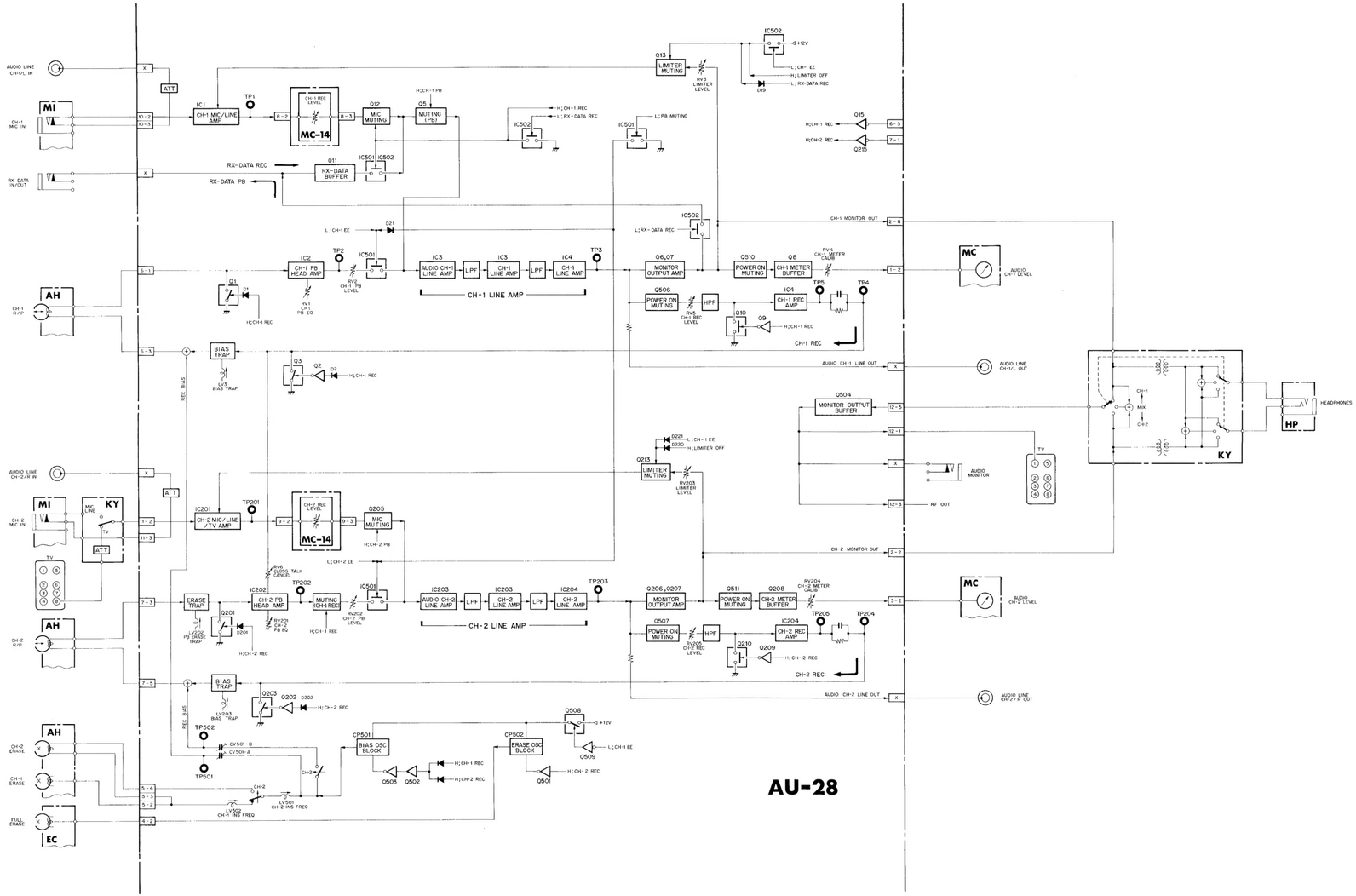

SERVO SERVO

## SERVO SYSTEM BLOCK DIAGRAM

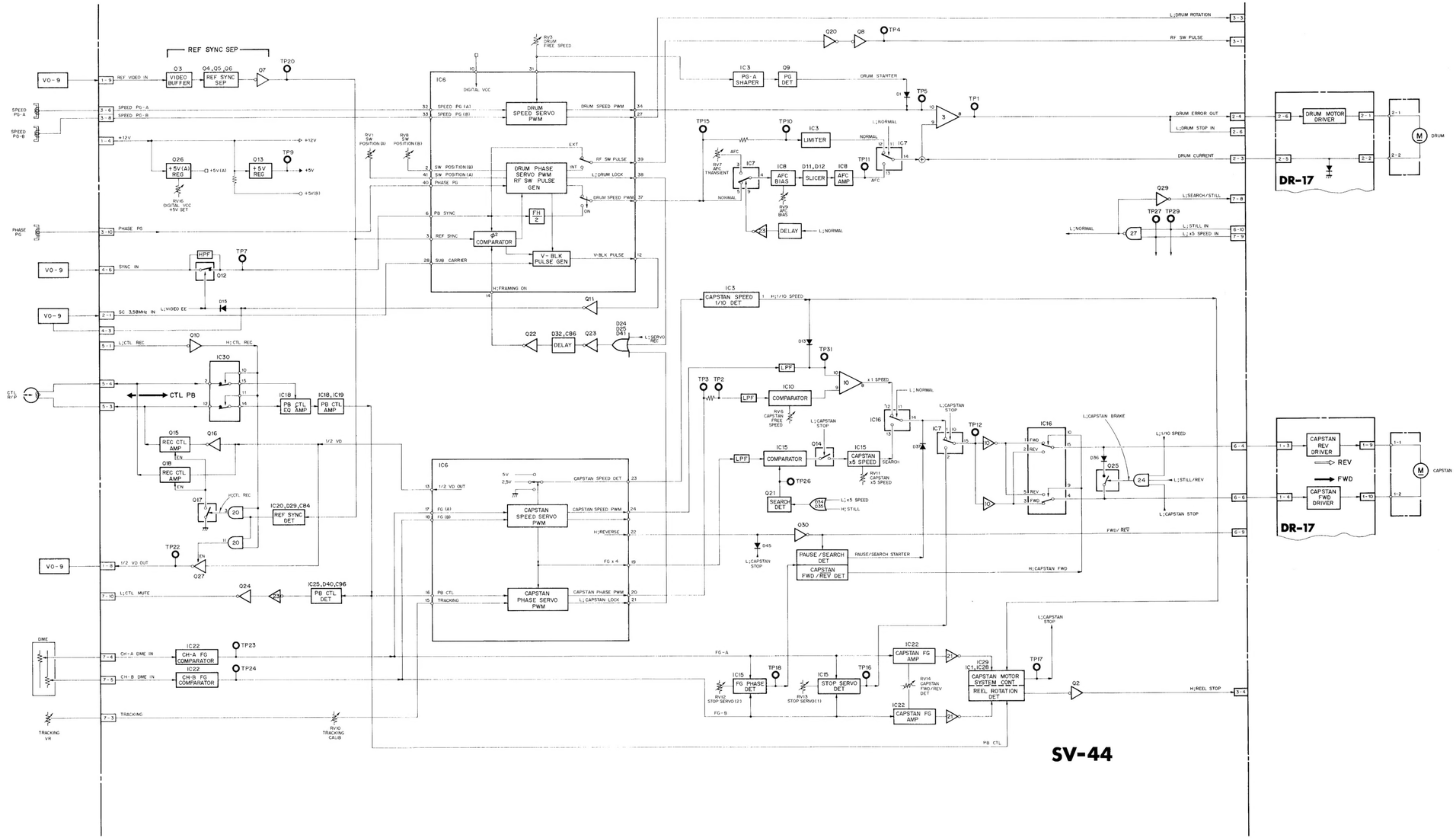

# SECTION 13
# FLOW CHART

## VIDEO SYSTEM FLOW CHART

CONDITION : CLEAN THE VIDEO HEAD
NORMAL SERVO SYSTEM

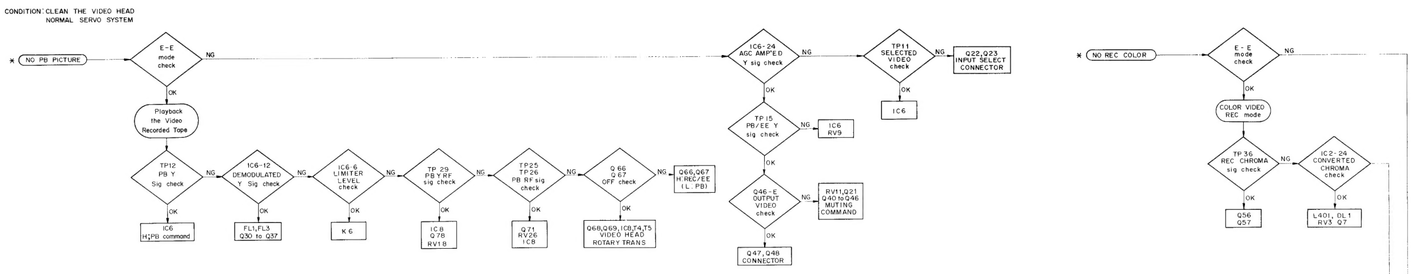


## AUDIO FLOW CHART

CONDITION : CLEAN THE AUDIO HEAD

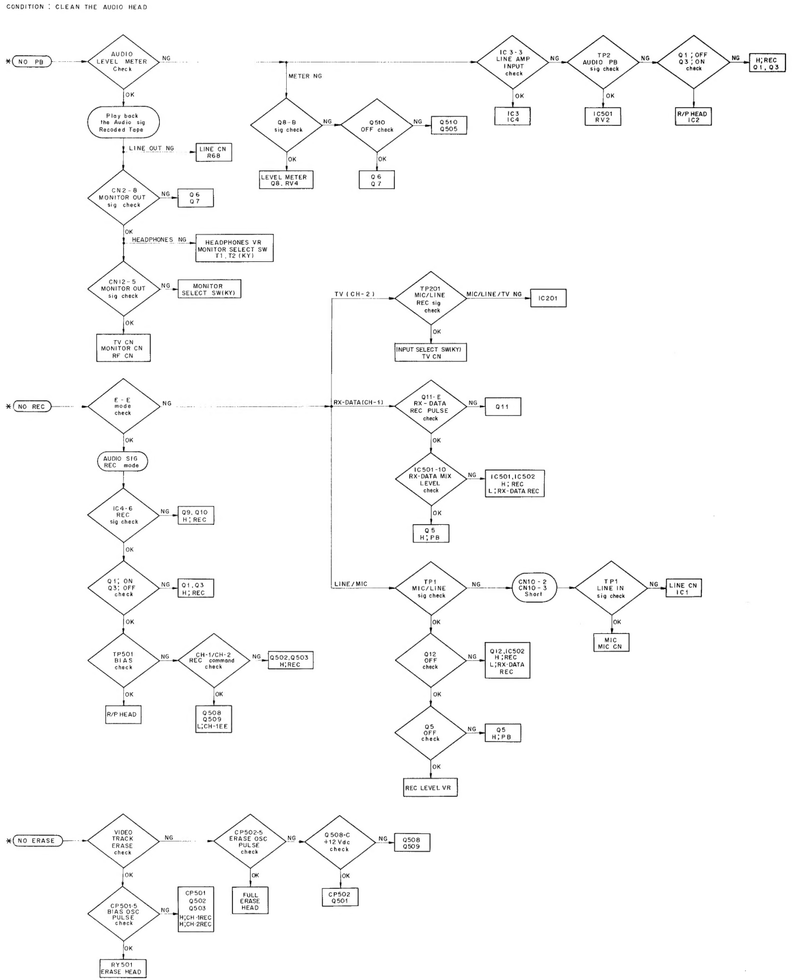

SERVO FLOW CHART SERVO FLOW CHART

## SERVO SYSTEM FLOW CHART

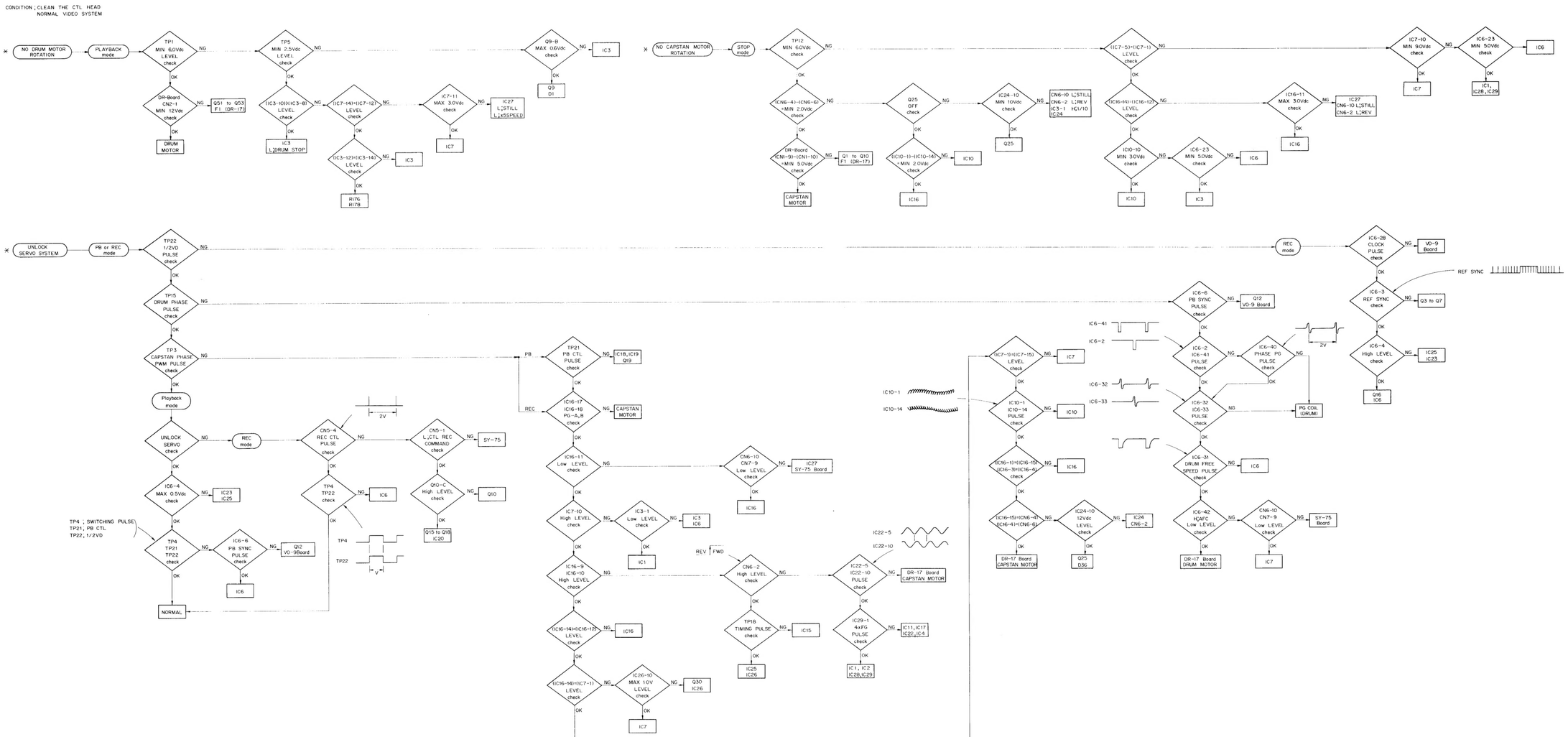

CD4053AE/BE (RCA)
TC4053BP (TOSHIBA)
HD14053BP (HITACHI)
C-MOS 2-CHANNEL MULTIPLEXER / DEMULTIPLEXER
— TOP VIEW —

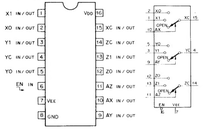


CD4069AE/BE (RCA)
TC4069UBP (TOSHIBA)
M5840698 (FUJITSU)
μPD4069UBC (NEC)
HD14069UBP (HITACHI)
C-MOS INVERTER
— TOP VIEW —

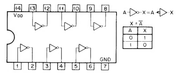


CD4071AE/BE (RCA)
TC4071BP (TOSHIBA)
μPD4071BC (NEC)
C-MOS 2-INPUT OR GATE
— TOP VIEW —

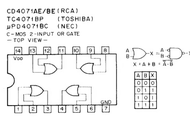


CD4073AE/BE (RCA)
TC4073BP (TOSHIBA)
C-MOS 3-INPUT POSITIVE AND GATE
— TOP VIEW —

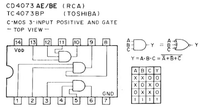


CD4075BE (RCA)
TC4075BP (TOSHIBA)
C-MOS 3-INPUT OR GATE
— TOP VIEW —

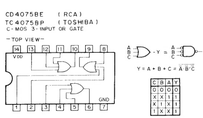


CD4081AE/BE (RCA)
TC4081BP (TOSHIBA)
μPD4081BC (NEC)
C-MOS 2-INPUT AND GATE
— TOP VIEW —

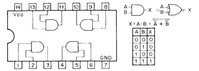


CX134A (SONY)
— TOP VIEW —

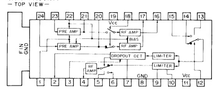


CX187 (SONY)
— TOP VIEW —

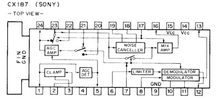


CX188 (SONY)
— TOP VIEW —

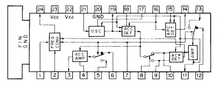


CX 805 (SONY)
— TOP VIEW —

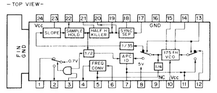


CX757 (SONY)
P-MOS VTR SYSTEM CONTROL
— TOP VIEW —

M54519P (MITSUBISHI)
7 STAGE DRIVER
— TOP VIEW —

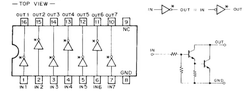


M54529P (MITSUBISHI)
TRANSISTOR ARRAY
— TOP VIEW —

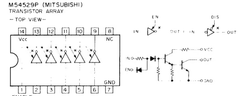


M54543L (MITSUBISHI)
BI-DIRECTIONAL MOTOR DRIVER
— SIDE VIEW —

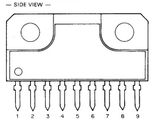


| IN1 | IN2 | MODE |
|---|---|---|
| 1 | 1 | Z |
| 0 | 0 | Z |
| 1 | 0 | H |
| 0 | 1 | L |
| 1 | 1 | H |
| 0 | 0 | L |

NO OPERATION
ROTATION
REVERSE ROTATION
BRAKE

0 : LOW LEVEL
1 : HIGH LEVEL
Z : HIGH IMPEDANCE

MC14520BCP (MOTOROLA)
TC4520BP (TOSHIBA)
C-MOS DUAL 4-BIT BINARY UP COUNTER
— TOP VIEW —

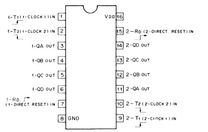


| STATE | OUTPUTS | | | |
|---|---|---|---|---|
| | QD | QC | QB | QA |
| 0 | 0 | 0 | 0 | 0 |
| 1 | 0 | 0 | 0 | 1 |
| 2 | 0 | 0 | 1 | 0 |
| 3 | 0 | 0 | 1 | 1 |
| 4 | 0 | 1 | 0 | 0 |
| 5 | 0 | 1 | 0 | 1 |
| 6 | 0 | 1 | 1 | 0 |
| 7 | 0 | 1 | 1 | 1 |
| 8 | 1 | 0 | 0 | 0 |
| 9 | 1 | 0 | 0 | 1 |
| 10 | 1 | 0 | 1 | 0 |
| 11 | 1 | 0 | 1 | 1 |
| 12 | 1 | 1 | 0 | 0 |
| 13 | 1 | 1 | 0 | 1 |
| 14 | 1 | 1 | 1 | 0 |
| 15 | 1 | 1 | 1 | 1 |

1 : HIGH

| T1 | T2 | Rp | ACTION |
|---|---|---|---|
| ▲ | L | 0 | INCREMENT COUNTER |
| ▲ | H | 0 | INCREMENT COUNTER |
| ▲ | ▲ | 0 | NO CHANGE |
| X | ▲ | 0 | NO CHANGE |
| ▲ | ▼ | 0 | NO CHANGE |
| L | L | 0 | NO CHANGE |
| X | X | 1 | QA THRU QD = 0 |





MC14538BCP (MOTOROLA)
C-MOS DUAL RETRIGGERABLE/NON-RETRIGGERABLE MONOSTABLE MULTIVIBRATOR
-TOP VIEW-

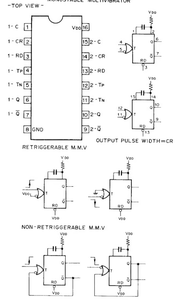


MC14584BCP (MOTOROLA)
μPD4584BC (NEC)
C-MOS SCHMITT TRIGGER INVERTER
— TOP VIEW —

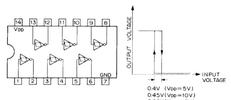


NJM2903BP(JRC)
OPERATIONAL AMPLIFIER
-TOP VIEW-

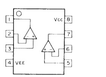


NJM4558D-D (JRC)
μPC4558C (NEC)
OPERATIONAL AMPLIFIER
-TOP VIEW-

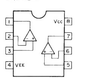


TA7060AP (TOSHIBA)
LINEAR AMP
— SIDE VIEW —

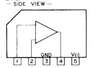


μPC324C (NEC)
QUAD OP AMPLIFIER
— TOP VIEW —

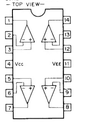


μPC358C (NEC)
LM358P (TI)
DUAL OPERATIONAL AMPLIFIERS
TOP VIEW

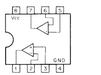


μPC1158H2 (NEC)
LOW NOISE PREAMPLIFIER WITH AGC
—SIDE VIEW—

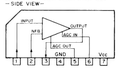


(2SA***, 2SB***)

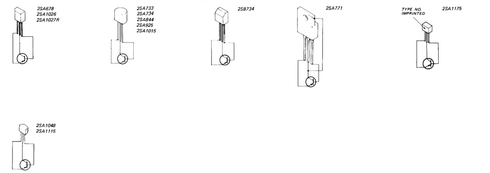


(2SC***, 2SD***)

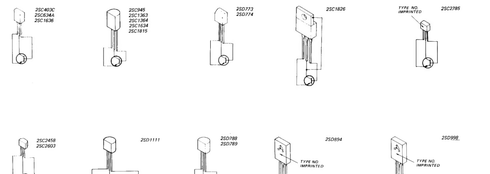


(OTHER)

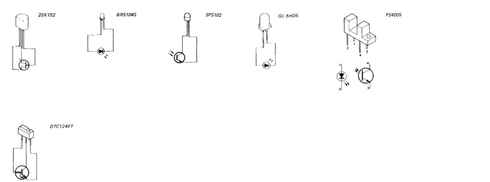

VO-9/(DS-14) VO-9/(DS-14)

VO-9
(VIDEO MOD/DEMODULATOR)
DS-14

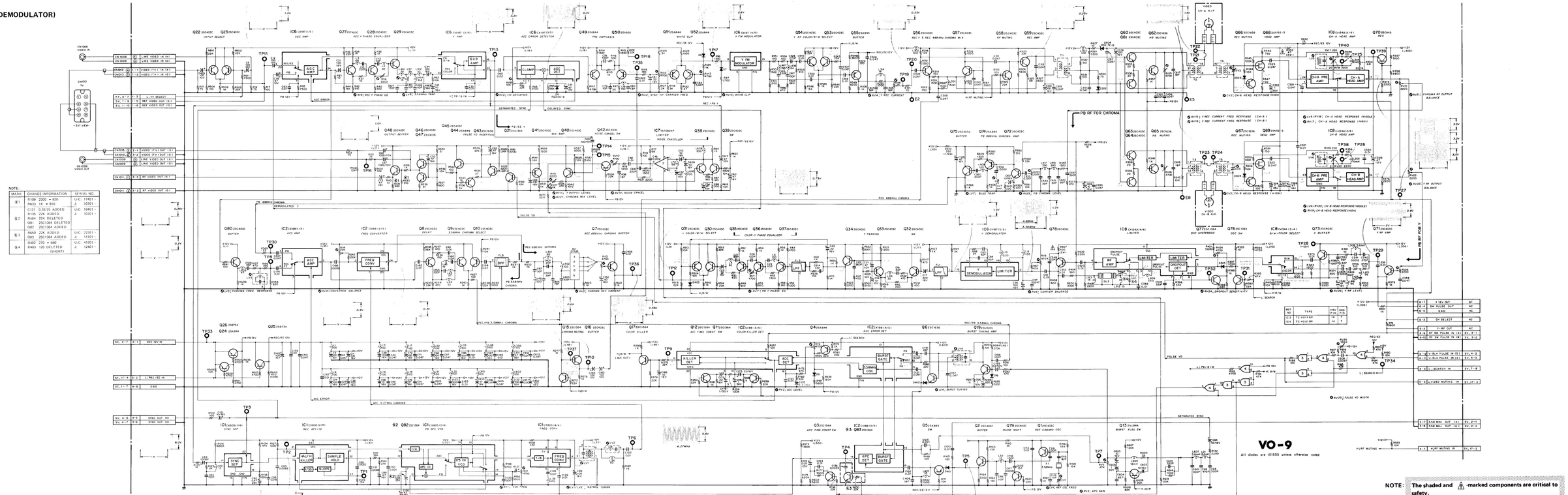


NOTE:

| MARK | CHANGE INFORMATION | SERIAL NO. |
|---|---|---|
| ※1 | R109 2200 → 820 | U/C : 17451 - |
| | R633 1K → 910 | J : 10701 - |
| ※2 | C137 0.33/25 ADDED | U/C : 18451 - |
| | R135 22K ADDED | J : 10701 - |
| | R464 22K DELETED | |
| | Q81 2SC1364 DELETED | |
| | Q87 2SC1364 ADDED | |
| ※3 | R650 22K ADDED | U/C : 22351 - |
| | Q83 2SC1364 ADDED | J : 11101 - |
| ※4 | R402 270 → 680 | U/C : 41201 - |
| | R403 120 DELETED (SHORT) | J : 12401 - |

REVISED '83. 9

VO-9
(VIDEO MOD/DEMODULATOR)
DS-14

UP TO 12050 (U/C)

| | | | | | | | |
|---|---|---|---|---|---|---|---|
| CN1 | A-1 | Q1 | L-2 | RV1 | I-4 | | |
| CN2 | E-7 | Q2 | L-3 | RV2 | L-4 | | |
| CN3 | I-1 | Q3 | L-5 | RV3 | N-4 | | |
| CN4 | I-7 | Q4 | L-4 | RV4 | N-2 | | |
| CN5 | N-7 | Q5 | L-5 | RV5 | K-4 | | |
| CN6 | K-1 | Q6 | L-5 | RV6 | C-1 | | |
| | | Q7 | N-4 | RV7 | A-3 | | |
| CV1 | L-2 | Q8 | M-1 | RV8 | C-4 | | |
| CV2 | F-6 | Q9 | N-2 | RV9 | D-1 | | |
| CV3 | F-7 | Q10 | N-2 | RV10 | F-1 | | |
| | | Q11 | N-6 | RV11 | G-1 | | |
| D6 | D-3 | Q12 | N-6 | RV12 | F-3 | | |
| D7 | E-3 | Q13 | K-5 | RV13 | F-3 | | |
| D8 | F-3 | Q15 | L-1 | RV14 | B-6 | | |
| D9 | L-4 | Q16 | K-2 | RV15 | D-6 | | |
| D16 | L-6 | Q17 | M-5 | RV16 | D-7 | | |
| D302 | B-7 | Q19 | L-6 | RV17 | F-5 | | |
| D303 | F-7 | Q21 | M-7 | RV18 | G-5 | | |
| D304 | F-7 | Q22 | B-1 | RV19 | H-6 | | |
| D305 | D-6 | Q23 | B-1 | RV20 | G-6 | | |
| D401 | L-4 | Q24 | N-7 | RV21 | H-5 | | |
| D402 | M-5 | Q25 | N-7 | RV22 | H-5 | | |
| D403 | C-4 | Q26 | N-6 | RV23 | J-6 | | |
| D604 | C-7 | Q27 | A-2 | RV24 | D-6 | | |
| | | Q28 | B-2 | RV25 | M-7 | | |
| E1 | A-2 | Q29 | C-2 | RV26 | H-5 | | |
| E2 | B-6 | Q30 | B-3 | RV27 | G-2 | | |
| E3 | G-7 | Q31 | B-3 | | | | |
| E4 | H-4 | Q32 | B-4 | T1 | B-7 | | |
| E5 | D-7 | Q33 | B-5 | T2 | D-7 | | |
| E6 | K-7 | Q34 | A-5 | T3 | D-7 | | |
| E7 | L-1 | Q35 | A-3 | T4 | E-7 | | |
| | | Q36 | A-3 | T5 | E-7 | | |
| IC1 | J-3 | Q37 | A-4 | | | | |
| IC2 | M-3 | Q38 | D-1 | TP1 | I-3 | | |
| IC3 | L-7 | Q39 | D-1 | TP2 | I-3 | | |
| IC4 | K-7 | Q40 | G-1 | TP3 | J-4 | | |
| IC6 | D-3 | Q41 | G-1 | TP4 | K-3 | | |
| IC7 | F-1 | Q42 | G-2 | TP5 | K-3 | | |
| IC8 | F-5 | Q43 | H-2 | TP6 | L-2 | | |
| | | Q44 | H-1 | TP7 | K-5 | | |
| LV1 | K-3 | Q45 | H-2 | TP8 | N-5 | | |
| LV2 | K-2 | Q46 | H-1 | TP9 | M-5 | | |
| LV3 | N-5 | Q47 | H-1 | TP10 | K-2 | | |
| LV4 | M-5 | Q48 | I-2 | TP11 | B-1 | | |
| LV5 | H-5 | Q49 | E-2 | TP12 | B-3 | | |
| LV6 | H-6 | Q50 | F-2 | TP13 | G-1 | | |
| LV7 | J-7 | Q51 | E-2 | TP14 | F-1 | | |
| LV8 | B-3 | Q52 | E-3 | TP15 | G-1 | | |
| | | Q53 | C-5 | TP16 | I-1 | | |
| | | Q54 | C-5 | TP17 | E-3 | | |
| | | Q55 | C-5 | TP18 | F-3 | | |
| | | Q56 | A-6 | TP19 | B-6 | | |
| | | Q57 | A-6 | TP20 | B-6 | | |
| | | Q58 | A-7 | TP21 | E-6 | | |
| | | Q59 | A-7 | TP22 | E-6 | | |
| | | Q60 | C-7 | TP23 | D-7 | | |
| | | Q61 | C-7 | TP24 | E-7 | | |
| | | Q62 | C-7 | TP25 | G-5 | | |
| | | Q63 | C-7 | TP26 | G-6 | | |
| | | Q64 | C-7 | TP27 | H-4 | | |
| | | Q65 | D-7 | TP28 | H-7 | | |
| | | Q66 | F-7 | TP29 | G-4 | | |
| | | Q67 | F-7 | TP30 | K-6 | | |
| | | Q68 | F-7 | TP31 | H-7 | | |
| | | Q69 | F-7 | TP32 | E-6 | | |
| | | Q70 | H-6 | TP33 | K-7 | | |
| | | Q71 | H-5 | TP34 | H-7 | | |
| | | Q72 | I-7 | TP35 | F-2 | | |
| | | Q73 | F-4 | TP36 | N-4 | | |
| | | Q74 | J-7 | TP37 | M-1 | | |
| | | Q75 | J-7 | TP38 | H-6 | | |
| | | Q76 | H-7 | TP39 | H-6 | | |
| | | Q77 | E-6 | TP40 | F-5 | | |
| | | Q78 | E-5 | | | | |
| | | Q79 | L-3 | X1 | L-2 | | |
| | | Q80 | C-1 | | | | |

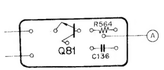


**DS-14**
-SOLDERING SIDE-

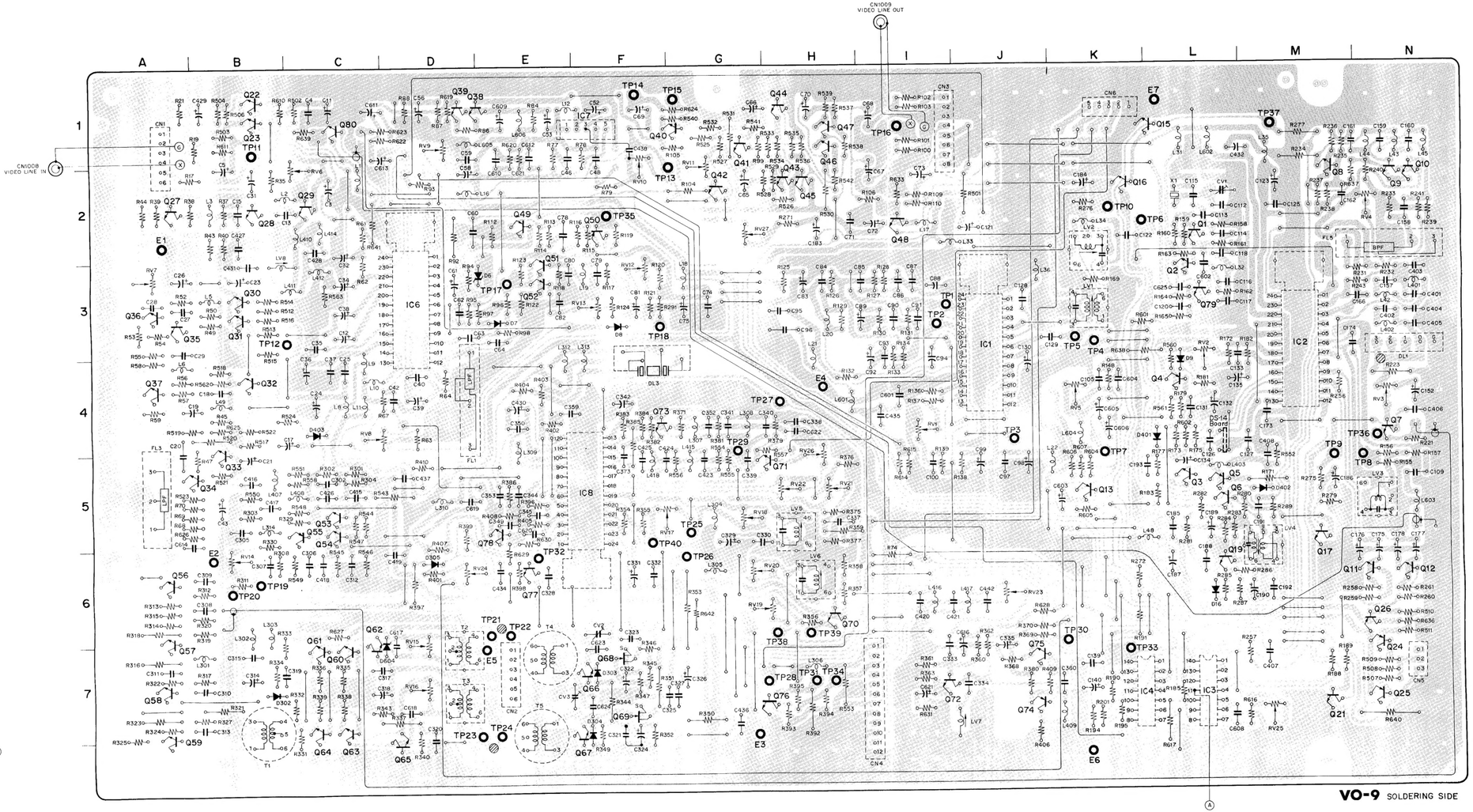


**VO-9** SOLDERING SIDE

## VO-9
## (VIDEO MOD/DEMODULATOR)

12051 TO 18450 (U/C)

| | | | | | | | |
|---|---|---|---|---|---|---|---|
| CN1 | A-1 | Q1 | L-2 | RV1 | I-4 | | |
| CN2 | E-7 | Q2 | L-3 | RV2 | L-4 | | |
| CN3 | I-1 | Q3 | L-5 | RV3 | N-4 | | |
| CN4 | I-7 | Q4 | L-4 | RV4 | N-2 | | |
| CN5 | N-7 | Q5 | L-5 | RV5 | K-4 | | |
| CN6 | K-1 | Q6 | L-5 | RV6 | C-1 | | |
| | | Q7 | N-4 | RV7 | A-3 | | |
| CV1 | L-2 | Q8 | M-1 | RV8 | C-4 | | |
| CV2 | F-6 | Q9 | N-2 | RV9 | D-1 | | |
| CV3 | F-7 | Q10 | N-2 | RV10 | F-1 | | |
| | | Q11 | N-6 | RV11 | G-1 | | |
| D6 | D-3 | Q12 | N-6 | RV12 | F-3 | | |
| D7 | E-3 | Q13 | K-5 | RV13 | F-3 | | |
| D8 | F-3 | Q15 | L-1 | RV14 | B-6 | | |
| D9 | L-4 | Q16 | K-2 | RV15 | D-6 | | |
| D16 | L-6 | Q17 | M-5 | RV16 | D-7 | | |
| D302 | B-7 | Q19 | L-6 | RV17 | F-5 | | |
| D303 | F-7 | Q21 | M-7 | RV18 | G-5 | | |
| D304 | F-7 | Q22 | B-1 | RV19 | H-6 | | |
| D305 | D-6 | Q23 | B-1 | RV20 | G-6 | | |
| D401 | L-4 | Q24 | N-7 | RV21 | H-5 | | |
| D402 | M-5 | Q25 | N-7 | RV22 | H-5 | | |
| D403 | C-4 | Q26 | N-6 | RV23 | J-6 | | |
| D604 | C-7 | Q27 | A-2 | RV24 | D-6 | | |
| | | Q28 | B-2 | RV25 | M-7 | | |
| E1 | A-2 | Q29 | C-2 | RV26 | H-5 | | |
| E2 | B-6 | Q30 | B-3 | RV27 | G-2 | | |
| E3 | B-7 | Q31 | B-3 | | | | |
| E4 | H-4 | Q32 | B-4 | T1 | B-7 | | |
| E5 | D-7 | Q33 | B-5 | T2 | D-7 | | |
| E6 | K-7 | Q34 | A-5 | T3 | D-7 | | |
| E7 | L-1 | Q35 | A-3 | T4 | E-7 | | |
| E8 | J-1 | Q36 | A-3 | T5 | E-7 | | |
| E9 | N-4 | Q37 | A-4 | | | | |
| | | Q38 | D-1 | TP1 | I-3 | | |
| IC1 | J-3 | Q39 | D-1 | TP2 | I-3 | | |
| IC2 | M-3 | Q40 | G-1 | TP3 | J-4 | | |
| IC3 | L-7 | Q41 | G-1 | TP4 | K-3 | | |
| IC4 | K-7 | Q42 | G-2 | TP5 | K-3 | | |
| IC6 | D-3 | Q43 | H-2 | TP6 | L-2 | | |
| IC7 | F-1 | Q44 | H-1 | TP7 | K-5 | | |
| IC8 | F-5 | Q45 | H-2 | TP8 | N-5 | | |
| | | Q46 | H-1 | TP9 | N-5 | | |
| LV1 | K-3 | Q47 | H-1 | TP10 | K-2 | | |
| LV2 | K-2 | Q48 | I-2 | TP11 | B-1 | | |
| LV3 | N-5 | Q49 | E-2 | TP12 | B-3 | | |
| LV4 | M-5 | Q50 | F-2 | TP13 | J-1 | | |
| LV5 | H-5 | Q51 | E-2 | TP14 | F-1 | | |
| LV6 | H-6 | Q52 | E-3 | TP15 | G-1 | | |
| LV7 | J-7 | Q53 | C-5 | TP16 | I-1 | | |
| LV8 | B-3 | Q54 | C-5 | TP17 | E-3 | | |
| | | Q55 | C-5 | TP18 | F-3 | | |
| | | Q56 | A-6 | TP19 | B-6 | | |
| | | Q57 | A-6 | TP20 | B-6 | | |
| | | Q58 | A-7 | TP21 | E-6 | | |
| | | Q59 | A-7 | TP22 | E-6 | | |
| | | Q60 | C-7 | TP23 | D-7 | | |
| | | Q61 | C-7 | TP24 | E-7 | | |
| | | Q62 | C-7 | TP25 | G-5 | | |
| | | Q63 | C-7 | TP26 | G-6 | | |
| | | Q64 | C-7 | TP27 | H-4 | | |
| | | Q65 | D-7 | TP28 | H-7 | | |
| | | Q66 | F-7 | TP29 | G-4 | | |
| | | Q67 | F-7 | TP30 | K-6 | | |
| | | Q68 | F-7 | TP31 | H-7 | | |
| | | Q69 | F-7 | TP32 | E-6 | | |
| | | Q70 | H-6 | TP33 | K-7 | | |
| | | Q71 | H-5 | TP34 | H-7 | | |
| | | Q72 | I-7 | TP35 | F-2 | | |
| | | Q73 | F-4 | TP36 | N-4 | | |
| | | Q74 | J-7 | TP37 | M-1 | | |
| | | Q75 | J-7 | TP38 | H-6 | | |
| | | Q76 | H-7 | TP39 | H-6 | | |
| | | Q77 | E-6 | TP40 | F-5 | | |
| | | Q78 | E-5 | | | | |
| | | Q79 | L-3 | X1 | L-2 | | |
| | | Q80 | C-1 | | | | |
| | | Q81 | M-5 | | | | |

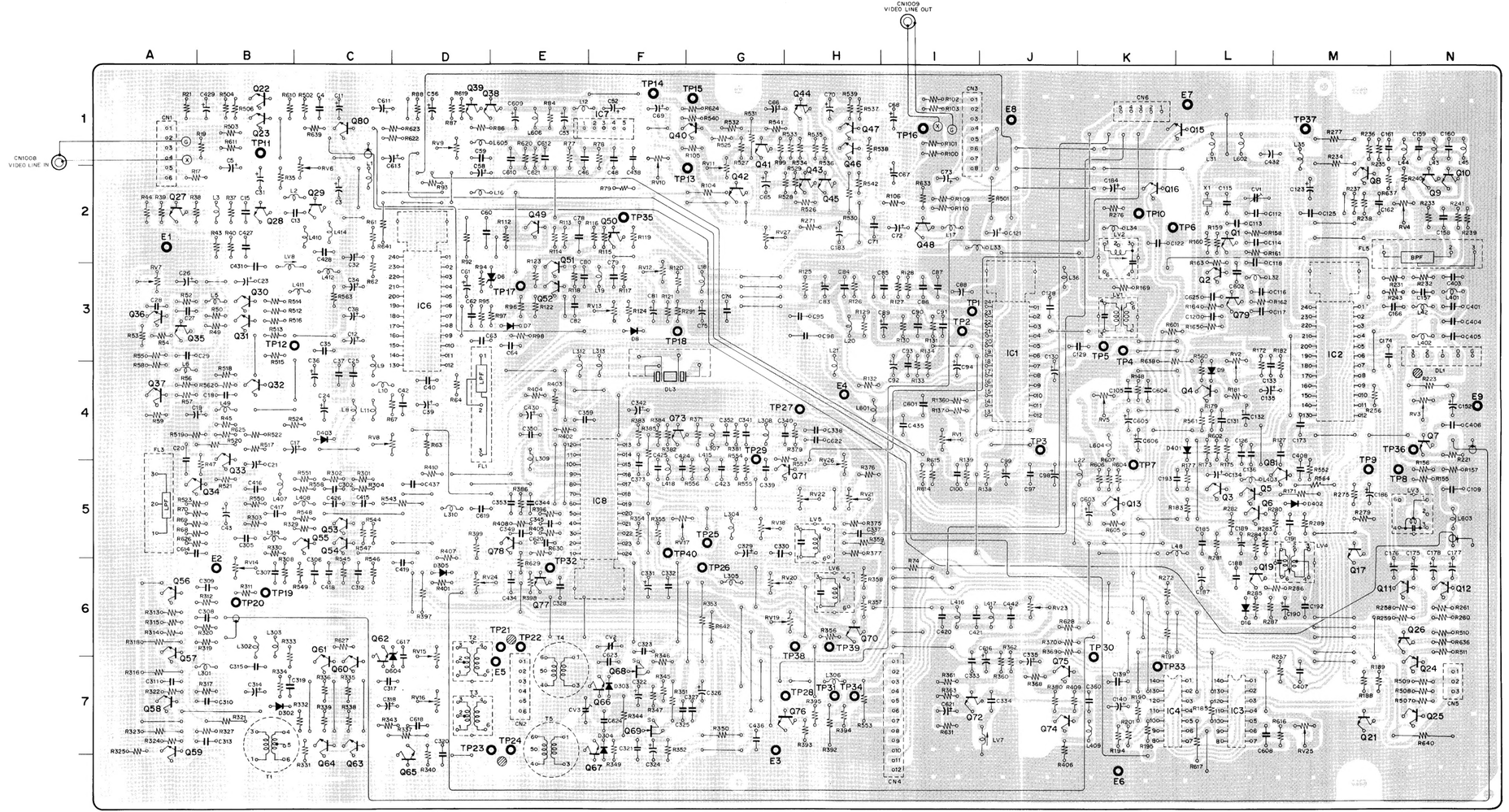


VO-9 SOLDERING SIDE

**VO-9**
**(VIDEO MOD/DEMODULATOR)**

S/N 18451 TO 27650 (U/C)

| | | | | | |
|---|---|---|---|---|---|
| CN1 | A - 1 | Q1 | L - 2 | RV1 | I - 4 |
| CN2 | E - 7 | Q2 | L - 3 | RV2 | L - 4 |
| CN3 | I - 1 | Q3 | L - 5 | RV3 | N - 4 |
| CN4 | I - 7 | Q4 | L - 4 | RV4 | N - 2 |
| CN5 | N - 7 | Q5 | L - 5 | RV5 | K - 4 |
| CN6 | K - 1 | Q6 | L - 5 | RV6 | C - 1 |
| | | Q7 | N - 4 | RV7 | A - 3 |
| CV1 | L - 2 | Q8 | M - 1 | RV8 | C - 4 |
| CV2 | F - 6 | Q9 | N - 2 | RV9 | D - 1 |
| CV3 | F - 7 | Q10 | N - 2 | RV10 | F - 1 |
| | | Q11 | N - 6 | RV11 | G - 1 |
| D6 | D - 3 | Q12 | N - 6 | RV12 | F - 3 |
| D7 | E - 3 | Q13 | K - 5 | RV13 | F - 3 |
| D8 | F - 3 | Q15 | L - 1 | RV14 | B - 6 |
| D9 | L - 4 | Q16 | K - 2 | RV15 | D - 6 |
| D16 | L - 6 | Q17 | M - 5 | RV16 | D - 7 |
| D302 | B - 7 | Q19 | L - 6 | RV17 | F - 5 |
| D303 | F - 7 | Q21 | M - 7 | RV18 | G - 5 |
| D304 | F - 7 | Q22 | B - 1 | RV19 | H - 6 |
| D305 | D - 6 | Q23 | B - 1 | RV20 | G - 6 |
| D401 | L - 4 | Q24 | N - 7 | RV21 | H - 5 |
| D402 | M - 5 | Q25 | N - 7 | RV22 | H - 5 |
| D403 | C - 4 | Q26 | N - 6 | RV23 | J - 6 |
| D604 | C - 7 | Q27 | A - 2 | RV24 | D - 6 |
| | | Q28 | B - 2 | RV25 | M - 7 |
| E1 | A - 2 | Q29 | C - 2 | RV26 | H - 5 |
| E2 | B - 6 | Q30 | B - 3 | RV27 | G - 2 |
| E3 | G - 7 | Q31 | B - 3 | | |
| E4 | H - 4 | Q32 | B - 4 | T1 | B - 7 |
| E5 | D - 7 | Q33 | B - 5 | T2 | D - 7 |
| E6 | K - 7 | Q34 | A - 5 | T3 | D - 7 |
| E7 | L - 1 | Q35 | A - 3 | T4 | E - 7 |
| E8 | J - 1 | Q36 | A - 3 | T5 | E - 7 |
| E9 | N - 4 | Q37 | A - 4 | | |
| | | Q38 | D - 1 | TP1 | I - 3 |
| IC1 | J - 3 | Q39 | D - 1 | TP2 | I - 3 |
| IC2 | M - 3 | Q40 | G - 1 | TP3 | J - 4 |
| IC3 | L - 7 | Q41 | G - 1 | TP4 | K - 3 |
| IC4 | K - 7 | Q42 | G - 2 | TP5 | K - 3 |
| IC6 | D - 3 | Q43 | H - 2 | TP6 | L - 2 |
| IC7 | F - 1 | Q44 | H - 1 | TP7 | K - 5 |
| IC8 | F - 5 | Q45 | H - 2 | TP8 | N - 5 |
| | | Q46 | H - 1 | TP9 | M - 5 |
| LV1 | K - 3 | Q47 | H - 1 | TP10 | K - 2 |
| LV2 | K - 2 | Q48 | I - 2 | TP11 | B - 1 |
| LV3 | N - 5 | Q49 | E - 2 | TP12 | B - 3 |
| LV4 | M - 5 | Q50 | F - 2 | TP13 | G - 1 |
| LV5 | H - 5 | Q51 | E - 2 | TP14 | F - 1 |
| LV6 | H - 6 | Q52 | E - 3 | TP15 | G - 1 |
| LV7 | J - 7 | Q53 | C - 5 | TP16 | I - 1 |
| LV8 | B - 3 | Q54 | C - 5 | TP17 | E - 3 |
| | | Q55 | C - 5 | TP18 | F - 3 |
| | | Q56 | A - 6 | TP19 | B - 6 |
| | | Q57 | A - 6 | TP20 | B - 6 |
| | | Q58 | A - 7 | TP21 | E - 6 |
| | | Q59 | A - 7 | TP22 | E - 6 |
| | | Q60 | C - 7 | TP23 | D - 7 |
| | | Q61 | C - 7 | TP24 | E - 7 |
| | | Q62 | C - 7 | TP25 | G - 5 |
| | | Q63 | C - 7 | TP26 | G - 6 |
| | | Q64 | C - 7 | TP27 | H - 4 |
| | | Q65 | D - 7 | TP28 | H - 7 |
| | | Q66 | F - 7 | TP29 | G - 4 |
| | | Q67 | F - 7 | TP30 | K - 6 |
| | | Q68 | F - 7 | TP31 | H - 7 |
| | | Q69 | F - 7 | TP32 | E - 6 |
| | | Q70 | H - 6 | TP33 | K - 7 |
| | | Q71 | H - 5 | TP34 | H - 7 |
| | | Q72 | I - 7 | TP35 | F - 2 |
| | | Q73 | F - 4 | TP36 | N - 4 |
| | | Q74 | J - 7 | TP37 | M - 1 |
| | | Q75 | J - 7 | TP38 | H - 6 |
| | | Q76 | H - 7 | TP39 | H - 6 |
| | | Q78 | E - 6 | TP40 | F - 5 |
| | | Q79 | E - 5 | | |
| | | Q80 | L - 3 | X1 | L - 2 |
| | | Q82 | J - 4 | | |
| | | Q83 | M - 5 | | |

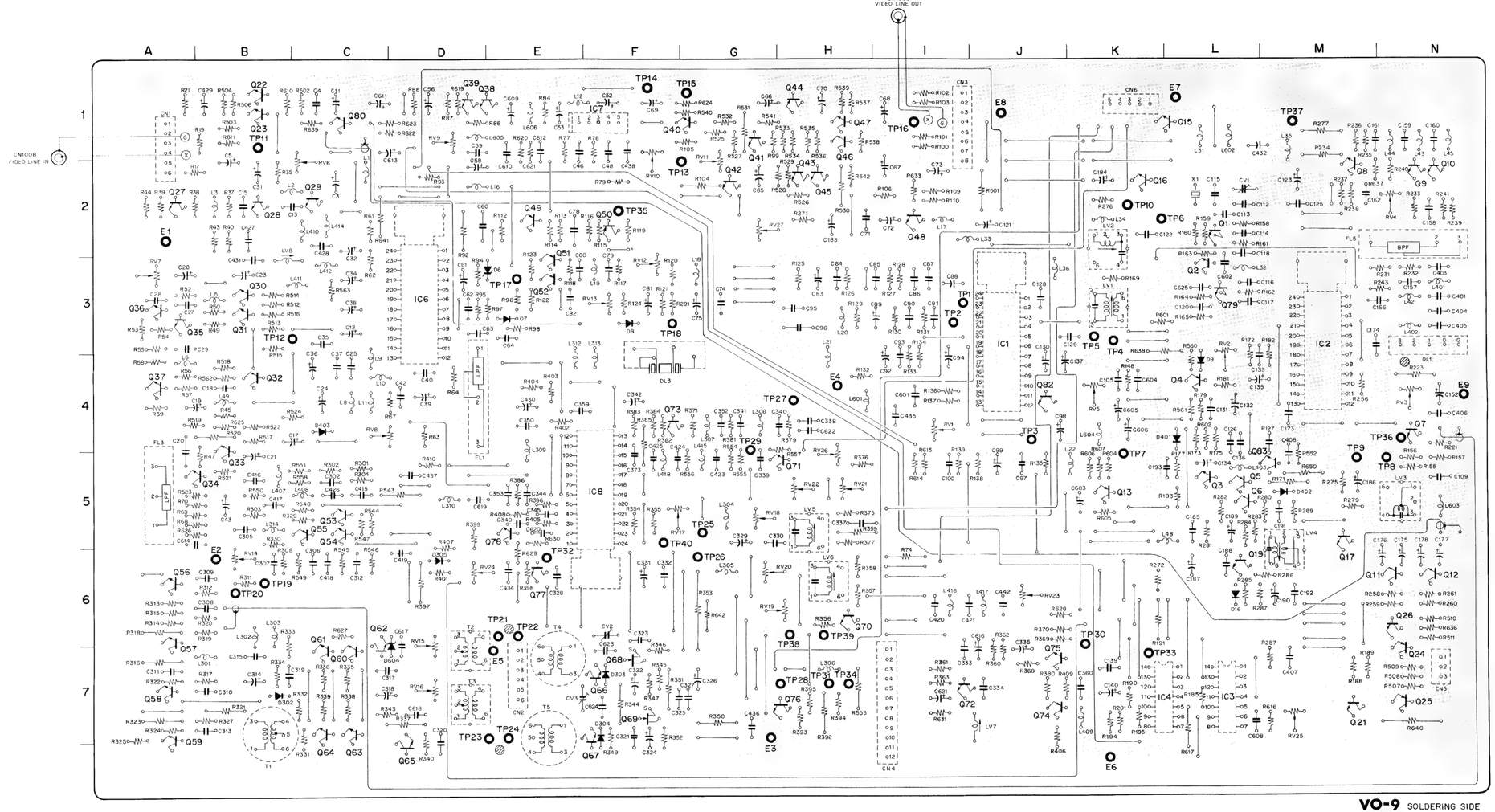


**VO-9** SOLDERING SIDE
1-606-374-17
VO-5600

## VO-9 (VIDEO MOD/DEMODULATOR)

S/N 27651 AND LATER

| | | | | | |
|---|---|---|---|---|---|
| CN1 | A-1 | Q1 | L-2 | RV1 | I-4 |
| CN2 | E-7 | Q2 | L-3 | RV2 | L-4 |
| CN3 | I-1 | Q3 | L-5 | RV3 | N-4 |
| CN4 | I-7 | Q4 | L-4 | RV4 | N-2 |
| CN5 | N-7 | Q5 | L-5 | RV5 | K-4 |
| CN6 | K-1 | Q6 | L-5 | RV6 | C-1 |
| | | Q7 | N-4 | RV7 | A-3 |
| CV1 | L-2 | Q8 | M-1 | RV8 | C-4 |
| CV2 | F-6 | Q9 | N-2 | RV9 | D-1 |
| CV3 | F-7 | Q10 | N-2 | RV10 | F-1 |
| | | Q11 | N-6 | RV11 | G-1 |
| D6 | D-3 | Q12 | N-6 | RV12 | F-3 |
| D7 | E-3 | Q13 | K-5 | RV13 | F-3 |
| D8 | F-3 | Q15 | L-1 | RV14 | B-6 |
| D9 | L-4 | Q16 | K-2 | RV15 | D-6 |
| D16 | L-6 | Q17 | M-5 | RV16 | D-7 |
| D302 | B-7 | Q19 | L-6 | RV17 | F-5 |
| D303 | F-7 | Q21 | M-7 | RV18 | G-5 |
| D304 | F-7 | Q22 | B-1 | RV19 | H-6 |
| D305 | D-6 | Q23 | B-1 | RV20 | G-6 |
| D401 | L-4 | Q24 | N-7 | RV21 | H-5 |
| D402 | M-5 | Q25 | N-7 | RV22 | H-5 |
| D403 | C-4 | Q26 | N-6 | RV23 | J-6 |
| D604 | C-7 | Q27 | A-2 | RV24 | D-6 |
| | | Q28 | B-2 | RV25 | M-7 |
| E1 | G-7 | Q29 | C-2 | RV26 | H-5 |
| E2 | B-6 | Q30 | B-3 | RV27 | G-2 |
| E3 | A-2 | Q31 | B-3 | | |
| E4 | J-1 | Q32 | B-4 | T1 | B-7 |
| E5 | D-7 | Q33 | B-5 | T2 | D-7 |
| E6 | L-1 | Q34 | A-5 | T3 | D-7 |
| E7 | N-4 | Q35 | A-3 | T4 | E-7 |
| E8 | K-7 | Q36 | A-3 | T5 | E-7 |
| E9 | K-7 | Q37 | A-4 | | |
| E10 | H-4 | Q38 | D-1 | TP1 | I-3 |
| | | Q39 | D-1 | TP2 | I-3 |
| IC1 | J-3 | Q40 | G-1 | TP3 | J-4 |
| IC2 | M-3 | Q41 | G-1 | TP4 | K-3 |
| IC3 | L-7 | Q42 | G-2 | TP5 | K-3 |
| IC4 | K-7 | Q43 | H-2 | TP6 | L-2 |
| IC6 | D-3 | Q44 | H-1 | TP7 | K-5 |
| IC7 | F-1 | Q45 | H-2 | TP8 | N-5 |
| IC8 | F-5 | Q46 | H-1 | TP9 | M-5 |
| | | Q47 | H-1 | TP10 | K-2 |
| LV1 | K-3 | Q48 | I-2 | TP11 | B-1 |
| LV2 | K-2 | Q49 | E-2 | TP12 | B-3 |
| LV3 | N-5 | Q50 | F-2 | TP13 | G-1 |
| LV4 | M-5 | Q51 | E-2 | TP14 | F-1 |
| LV5 | H-5 | Q52 | E-3 | TP15 | G-1 |
| LV6 | H-6 | Q53 | C-5 | TP16 | I-1 |
| LV7 | J-7 | Q54 | C-5 | TP17 | E-3 |
| LV8 | B-3 | Q55 | C-5 | TP18 | F-3 |
| | | Q56 | A-6 | TP19 | B-6 |
| | | Q57 | A-7 | TP20 | B-6 |
| | | Q58 | A-7 | TP21 | E-6 |
| | | Q59 | A-7 | TP22 | E-6 |
| | | Q60 | C-7 | TP23 | D-7 |
| | | Q61 | C-7 | TP24 | E-7 |
| | | Q62 | C-7 | TP25 | G-5 |
| | | Q63 | C-7 | TP26 | G-6 |
| | | Q64 | C-7 | TP27 | H-4 |
| | | Q65 | D-7 | TP28 | H-7 |
| | | Q66 | F-7 | TP29 | G-4 |
| | | Q67 | F-7 | TP30 | K-6 |
| | | Q68 | F-7 | TP32 | E-6 |
| | | Q69 | F-7 | TP33 | K-7 |
| | | Q70 | H-6 | TP34 | H-7 |
| | | Q71 | H-5 | TP35 | F-2 |
| | | Q72 | I-7 | TP36 | N-4 |
| | | Q73 | F-4 | TP37 | M-1 |
| | | Q74 | J-7 | TP38 | H-6 |
| | | Q75 | J-7 | TP39 | H-6 |
| | | Q76 | H-7 | TP40 | F-5 |
| | | Q77 | E-6 | | |
| | | Q78 | E-5 | X1 | L-2 |
| | | Q79 | L-3 | | |
| | | Q80 | C-1 | | |
| | | Q82 | J-4 | | |
| | | Q83 | M-5 | | |

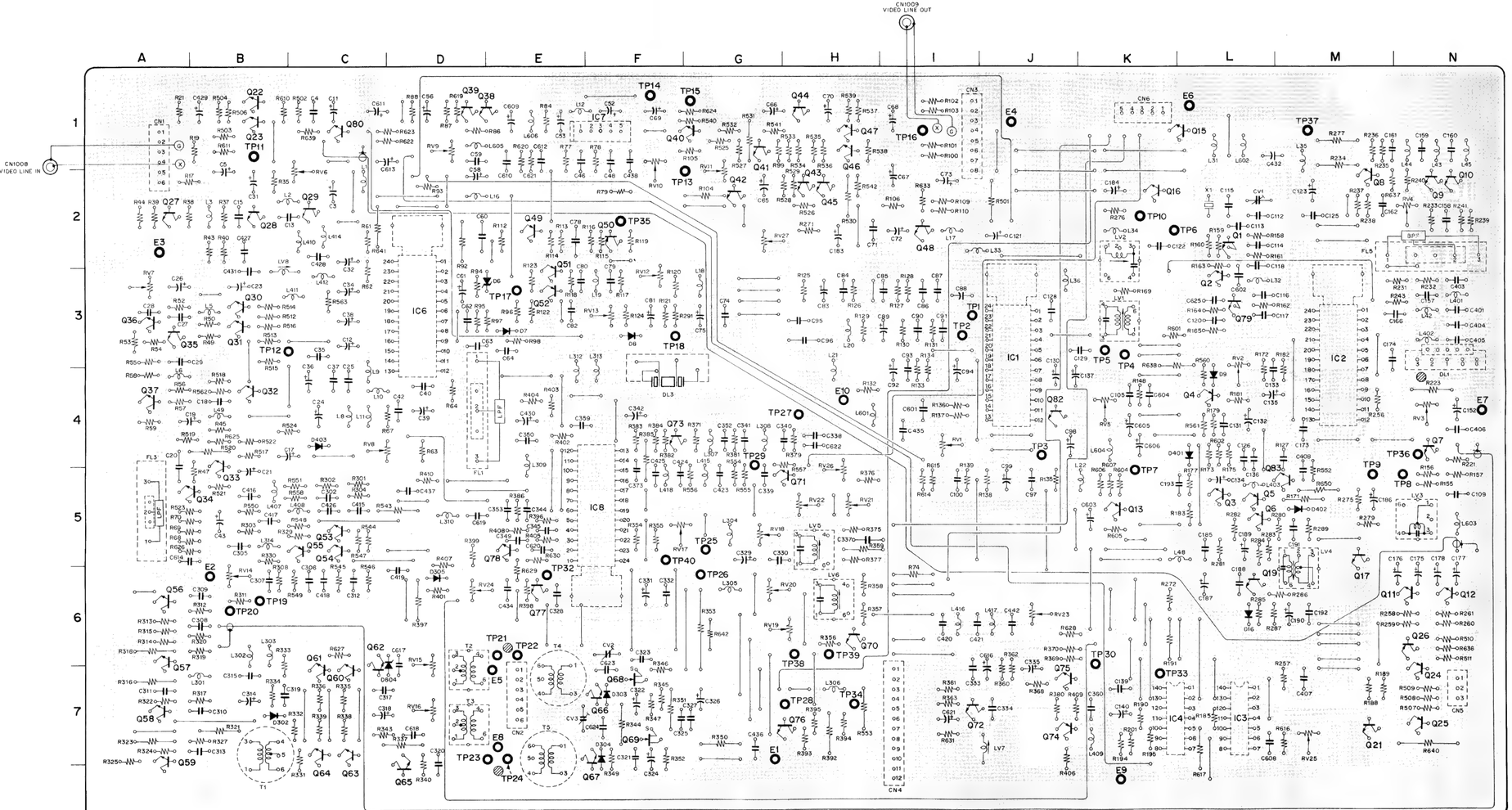


**VO-9** SOLDERING SIDE
1-606-374-18
VO-5600

AU-28 AU-28

AU-28
(AUDIO REC/PB)

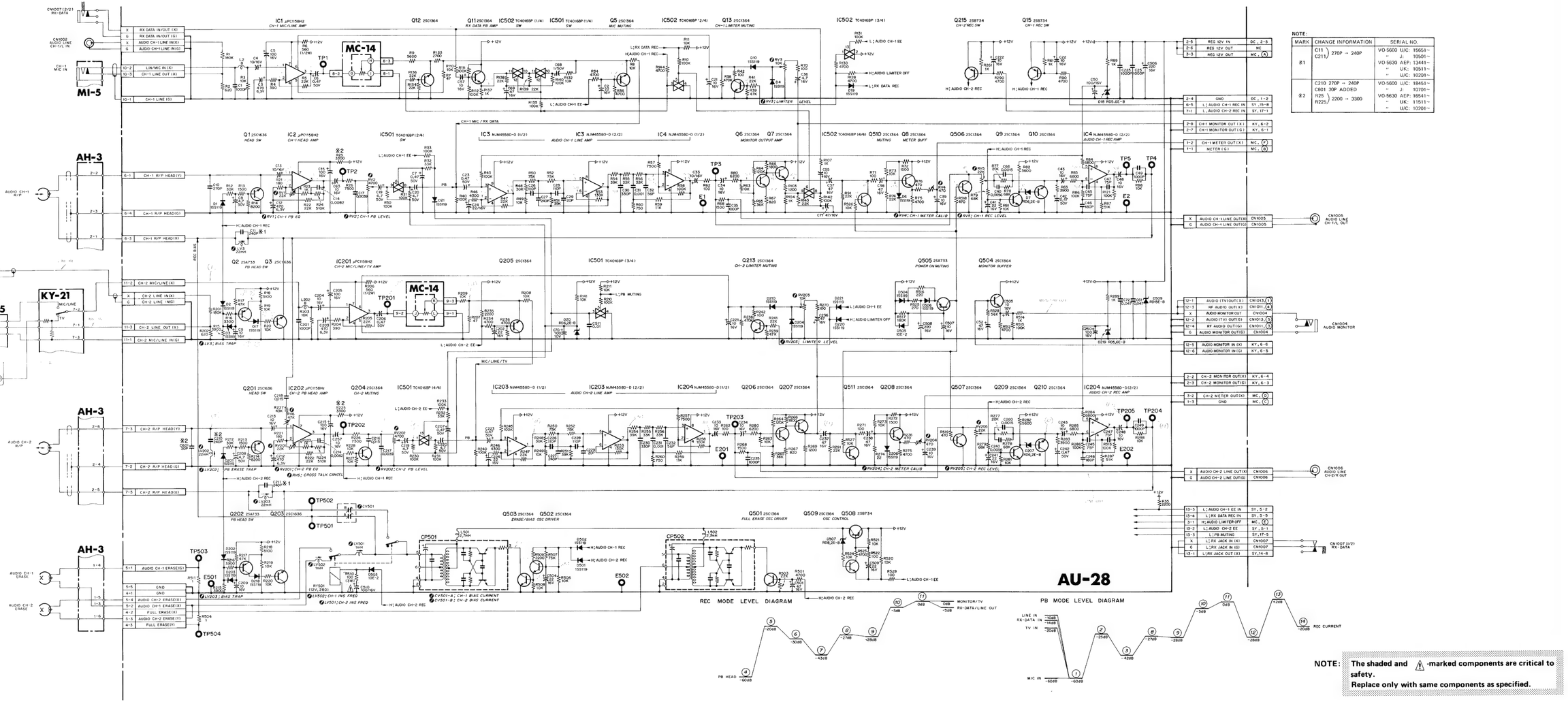


| MARK | CHANGE INFORMATION | SERIAL NO. |
|---|---|---|
| ※1 | C11 ) 270P → 240P<br>C211 ) | VO-5600 U/C: 15651~<br>" J: 10501~<br>VO-5630 AEP: 13441~<br>" UK: 10511~<br>" U/C: 10201~ |
| ※2 | C210 270P → 240P<br>C601 30P ADDED<br>R25 ) 2200 → 3300<br>R225 ) | VO-5600 U/C: 18451~<br>" J: 10701~<br>VO-5630 AEP: 16541~<br>" UK: 11511~<br>" U/C: 10201~ |

## MC-14 (METER/TRACKING VR)

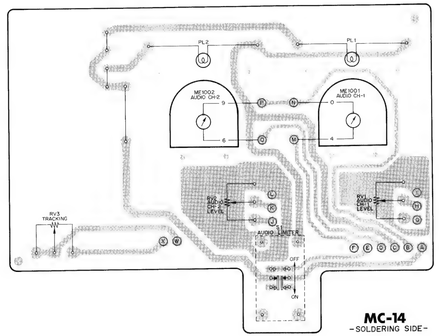


**MC-14**
-SOLDERING SIDE-

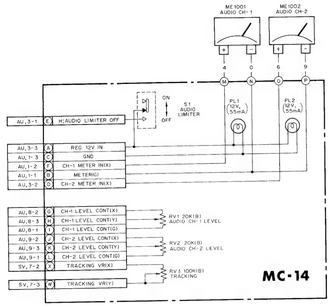


**MC-14**

## DR-17 (DRUM/CAPSTAN DRIVER)

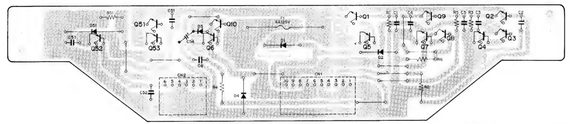

**DR-17** -SOLDERING SIDE-

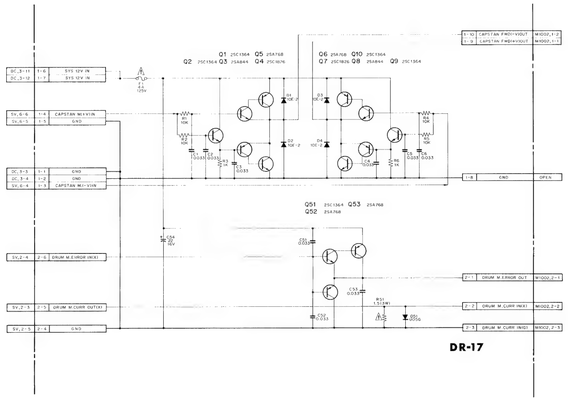


**DR-17**

**NOTE** **The shaded and ⚠ -marked components are critical to safety.**
**Replace only with same components as specified.**

SV-44 SV-44

## SV-44 (SERVO SYSTEM)

NOTE:

| MARK | CHANGE INFORMATION | SERIAL NO. |
|---|---|---|
| | R148 10K → 75K | U/C: 14151 ~ |
| | R151 22K DELETED | J: 10401 ~ |
| ※1 | R155 10K → 20K | |
| | R282 51K DELETED | |
| | R263 22K → 68K | |
| | R289 100K → 150K | |

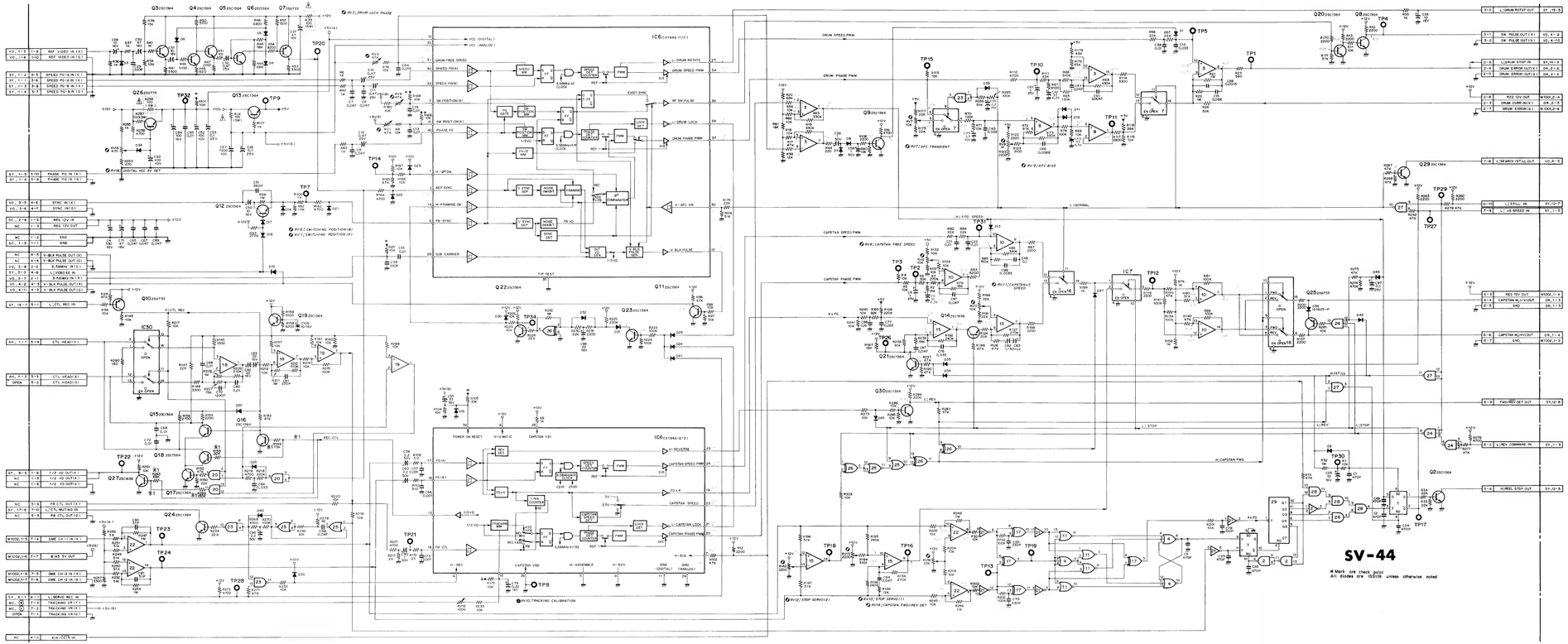


| REF NO. | TYPE | 12V PIN | GND PIN |
|---|---|---|---|
| IC 1 | TC4013BP | 14 | 7 |
| IC 2 | TC4013BP | 14 | 7 |
| IC 3 | μPC324C | 4 | 11 |
| IC 4 | TC4025BP | 14 | 7 |
| IC 5 | — | — | — |
| IC 6 | CX194A | — | — |
| IC 7 | TC4025BP | 16 | 8 |
| IC 8 | μPC358C | 8 | 4 |
| IC 9 | — | — | — |
| IC 10 | μPC324C | 4 | 11 |
| IC 11 | TC4001BP | 14 | 7 |
| IC 12 | — | — | — |
| IC 13 | — | — | — |
| IC 14 | — | — | — |
| IC 15 | μPC324C | 4 | 11 |
| IC 16 | TC4053BP | 16 | 8 |
| IC 17 | TC4053BP | 16 | 8 |
| IC 18 | NJM4558D-D | 8 | 4 |
| IC 19 | NJM4558D-D | 8 | 4 |
| IC 20 | TC4081BP | 14 | 7 |
| IC 21 | MC14584BCP | 14 | 7 |
| IC 22 | TC4011BP | 14 | 7 |
| IC 23 | TC4011BP | 14 | 7 |
| IC 24 | TC4042BP | 16 | 8 |
| IC 25 | TC4042BP | 14 | 7 |
| IC 26 | TC4030BP | 14 | 7 |
| IC 27 | TC4011BP | 14 | 7 |
| IC 28 | TC4081BP | 14 | 7 |
| IC 29 | TC4042BP | 16 | 8 |
| IC 30 | TC4025BP | 14 | 7 |

**NOTE:** The shaded and ⚠ marked components are critical to safety.
Replace only with same components as specified.

| | | | | | | | |
|---|---|---|---|---|---|---|---|
| CN1 | C-2 | Q2 | A-2 | D1 | J-1 | TP1 | C-1 |
| CN2 | C-1 | Q3 | E-2 | D2 | A-1 | TP2 | D-1 |
| CN3 | D-1 | Q4 | F-2 | D3 | D-2 | TP3 | D-1 |
| CN4 | D-3 | Q5 | F-2 | D4 | F-2 | TP4 | H-1 |
| CN5 | D-4 | Q6 | G-2 | D5 | F-2 | TP5 | J-1 |
| CN6 | D-6 | Q7 | G-2 | D6 | F-2 | TP7 | I-3 |
| CN7 | C-5 | Q8 | H-2 | D7 | I-2 | TP9 | I-3 |
| | | Q9 | I-2 | D8 | I-3 | TP10 | I-3 |
| | | Q10 | D-3 | D11 | L-2 | TP11 | K-3 |
| | | Q11 | E-3 | D12 | L-3 | TP12 | M-3 |
| | | Q12 | E-3 | D13 | N-2 | TP13 | A-4 |
| | | Q13 | I-3 | D14 | D-3 | TP14 | G-4 |
| | | Q14 | L-3 | D15 | D-3 | TP15 | J-4 |
| | | Q15 | E-4 | D16 | D-3 | TP16 | L-4 |
| | | Q16 | E-4 | D17 | E-3 | TP17 | L-4 |
| | | Q17 | E-4 | D18 | H-3 | TP18 | M-4 |
| | | Q18 | E-4 | D20 | E-4 | TP19 | A-5 |
| | | Q19 | F-4 | D21 | G-4 | TP20 | G-5 |
| | | Q20 | H-4 | D22 | G-4 | TP21 | G-5 |
| | | Q21 | L-4 | D23 | G-4 | TP22 | G-5 |
| | | Q22 | H-5 | D24 | H-4 | TP23 | I-5 |
| | | Q23 | H-5 | D25 | H-4 | TP24 | I-6 |
| | | Q24 | J-5 | D29 | G-5 | TP25 | J-5 |
| | | Q25 | L-5 | D30 | H-5 | TP26 | L-5 |
| | | Q26 | C-6 | D31 | H-6 | TP27 | N-5 |
| | | Q27 | H-6 | D32 | I-5 | TP28 | J-6 |
| | | Q29 | J-6 | D33 | J-5 | TP29 | N-6 |
| | | Q30 | N-6 | D34 | L-5 | TP30 | A-1 |
| | | | | D35 | L-5 | TP31 | N-3 |
| | | | | D36 | L-5 | TP32 | C-6 |
| | | | | D37 | N-5 | | |
| | | | | D38 | C-6 | RV1 | H-1 |
| | | | | D39 | J-6 | RV3 | L-2 |
| | | | | D40 | J-6 | RV6 | M-3 |
| | | | | D41 | K-6 | RV7 | J-4 |
| | | | | D42 | K-6 | RV8 | J-4 |
| | | | | D43 | K-6 | RV9 | K-4 |
| | | | | D44 | L-6 | RV10 | K-4 |
| | | | | D45 | M-6 | RV11 | L-4 |
| | | | | | | RV12 | M-4 |
| | | | | E1 | B-1 | RV13 | N-4 |
| | | | | E2 | G-1 | RV14 | C-4 |
| | | | | E3 | H-3 | RV16 | C-6 |
| | | | | IC1 | A-2 | | |
| | | | | IC2 | B-2 | | |
| | | | | IC3 | J-1 | | |
| | | | | IC4 | A-3 | | |
| | | | | IC6 | G-3 | | |
| | | | | IC7 | J-3 | | |
| | | | | IC8 | K-2 | | |
| | | | | IC10 | N-2 | | |
| | | | | IC11 | A-4 | | |
| | | | | IC15 | M-4 | | |
| | | | | IC16 | N-3 | | |
| | | | | IC17 | A-4 | | |
| | | | | IC18 | E-5 | | |
| | | | | IC19 | F-5 | | |
| | | | | IC20 | H-5 | | |
| | | | | IC21 | A-6 | | |
| | | | | IC22 | B-5 | | |
| | | | | IC23 | J-6 | | |
| | | | | IC24 | L-6 | | |
| | | | | IC25 | M-6 | | |
| | | | | IC26 | M-6 | | |
| | | | | IC27 | N-5 | | |
| | | | | IC28 | B-3 | | |
| | | | | IC29 | B-4 | | |
| | | | | IC30 | F-4 | | |

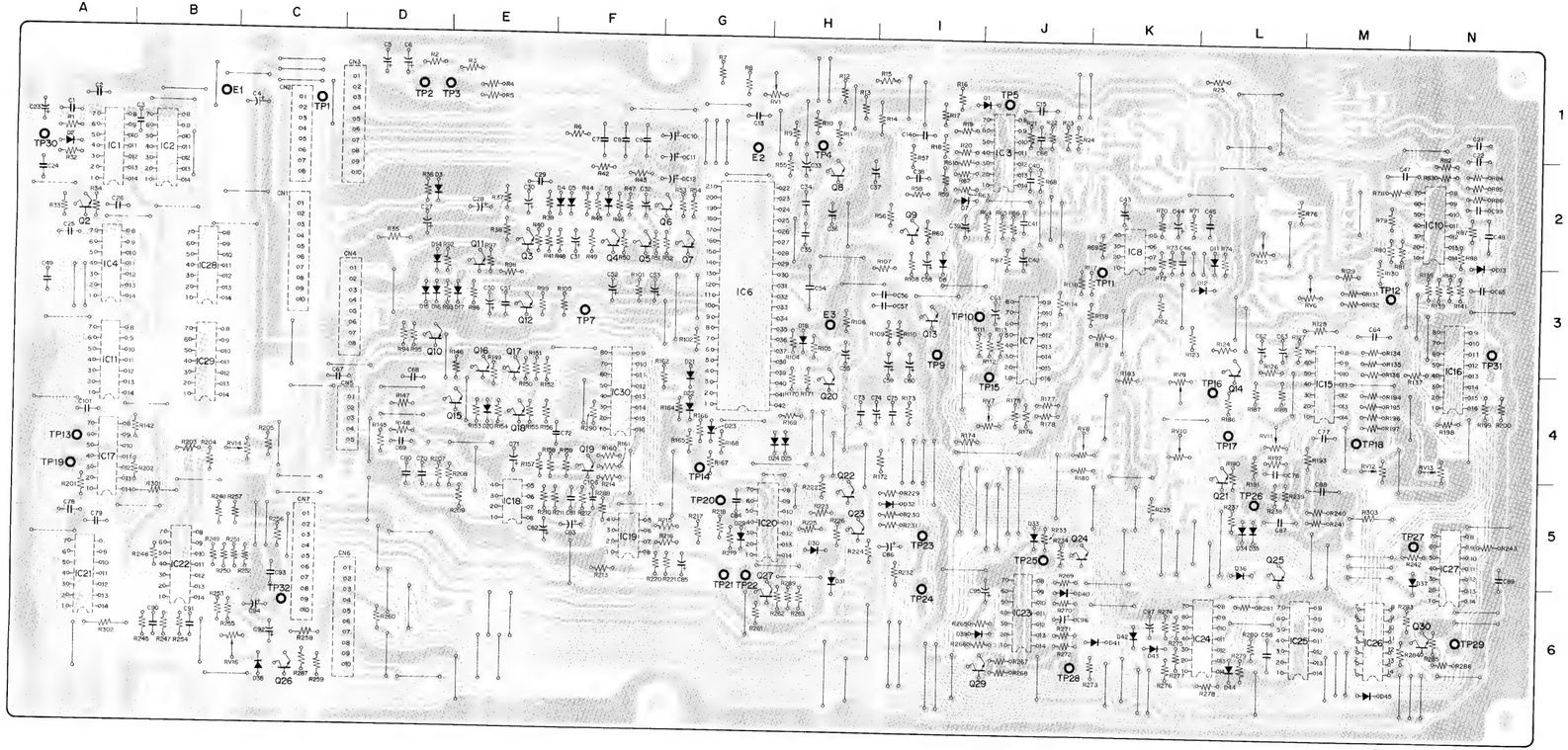


SV-44 –SOLDERING SIDE–

SV-44 (SERVO SYSTEM)

12051 TO 13050 (U/C)

| | | | | | |
|---|---|---|---|---|---|
| CN1 | C - 2 | Q2 | A - 2 | | |
| CN2 | C - 1 | Q3 | E - 2 | | |
| CN3 | D - 1 | Q4 | F - 2 | | |
| CN4 | D - 3 | Q5 | F - 2 | | |
| CN5 | D - 4 | Q6 | G - 2 | | |
| CN6 | D - 6 | Q7 | G - 2 | | |
| CN7 | C - 5 | Q8 | H - 2 | | |
| | | Q9 | I - 2 | | |
| D1 | J - 1 | Q10 | D - 3 | | |
| D2 | A - 1 | Q11 | E - 3 | | |
| D3 | D - 2 | Q12 | E - 3 | | |
| D4 | F - 2 | Q13 | I - 3 | | |
| D5 | F - 2 | Q14 | L - 3 | | |
| D6 | F - 2 | Q15 | E - 4 | | |
| D7 | I - 2 | Q16 | E - 4 | | |
| D8 | I - 3 | Q17 | E - 4 | | |
| D11 | L - 2 | Q18 | E - 4 | | |
| D12 | L - 3 | Q19 | F - 4 | | |
| D13 | N - 2 | Q20 | H - 4 | | |
| D14 | D - 3 | Q21 | L - 4 | | |
| D15 | D - 3 | Q22 | H - 5 | | |
| D16 | D - 3 | Q23 | H - 5 | | |
| D17 | E - 3 | Q24 | J - 5 | | |
| D18 | H - 3 | Q25 | L - 5 | | |
| D20 | E - 4 | Q26 | C - 6 | | |
| D21 | G - 4 | Q27 | H - 6 | | |
| D22 | G - 4 | Q29 | J - 6 | | |
| D23 | G - 4 | Q30 | N - 6 | | |
| D24 | H - 4 | | | | |
| D25 | H - 4 | TP1 | C - 1 | | |
| D29 | G - 5 | TP2 | D - 1 | | |
| D30 | H - 5 | TP3 | D - 1 | | |
| D31 | H - 6 | TP4 | H - 1 | | |
| D32 | I - 5 | TP5 | J - 1 | | |
| D33 | J - 5 | TP7 | F - 3 | | |
| D34 | L - 5 | TP9 | I - 3 | | |
| D35 | L - 5 | TP10 | I - 3 | | |
| D36 | L - 5 | TP11 | K - 3 | | |
| D37 | N - 5 | TP12 | M - 3 | | |
| D38 | C - 6 | TP13 | A - 4 | | |
| D39 | J - 6 | TP14 | G - 4 | | |
| D40 | J - 6 | TP15 | J - 4 | | |
| D41 | K - 6 | TP16 | L - 4 | | |
| D42 | K - 6 | TP17 | L - 4 | | |
| D43 | K - 6 | TP18 | M - 4 | | |
| D44 | L - 6 | TP19 | A - 5 | | |
| D45 | M - 6 | TP20 | G - 5 | | |
| | | TP21 | G - 5 | | |
| E1 | B - 1 | TP22 | G - 5 | | |
| E2 | G - 1 | TP23 | I - 5 | | |
| E3 | H - 3 | TP24 | I - 6 | | |
| | | TP25 | J - 5 | | |
| IC1 | A - 2 | TP26 | L - 5 | | |
| IC2 | B - 2 | TP27 | N - 5 | | |
| IC3 | J - 1 | TP28 | J - 6 | | |
| IC4 | A - 3 | TP29 | N - 6 | | |
| IC6 | G - 3 | TP30 | A - 1 | | |
| IC7 | J - 3 | TP31 | N - 3 | | |
| IC8 | K - 2 | TP32 | C - 6 | | |
| IC10 | N - 2 | TP33 | H - 6 | | |
| IC11 | A - 4 | | | | |
| IC15 | M - 4 | RV1 | H - 1 | | |
| IC16 | N - 3 | RV3 | L - 2 | | |
| IC17 | A - 4 | RV6 | M - 3 | | |
| IC18 | E - 5 | RV7 | J - 4 | | |
| IC19 | F - 5 | RV8 | J - 4 | | |
| IC20 | H - 5 | RV9 | K - 4 | | |
| IC21 | A - 6 | RV10 | K - 4 | | |
| IC22 | B - 5 | RV11 | L - 4 | | |
| IC23 | J - 6 | RV12 | M - 4 | | |
| IC24 | L - 6 | RV13 | N - 4 | | |
| IC25 | M - 6 | RV14 | C - 4 | | |
| IC26 | M - 6 | RV16 | C - 6 | | |
| IC27 | N - 5 | | | | |
| IC28 | B - 3 | | | | |
| IC29 | B - 4 | | | | |
| IC30 | F - 4 | | | | |

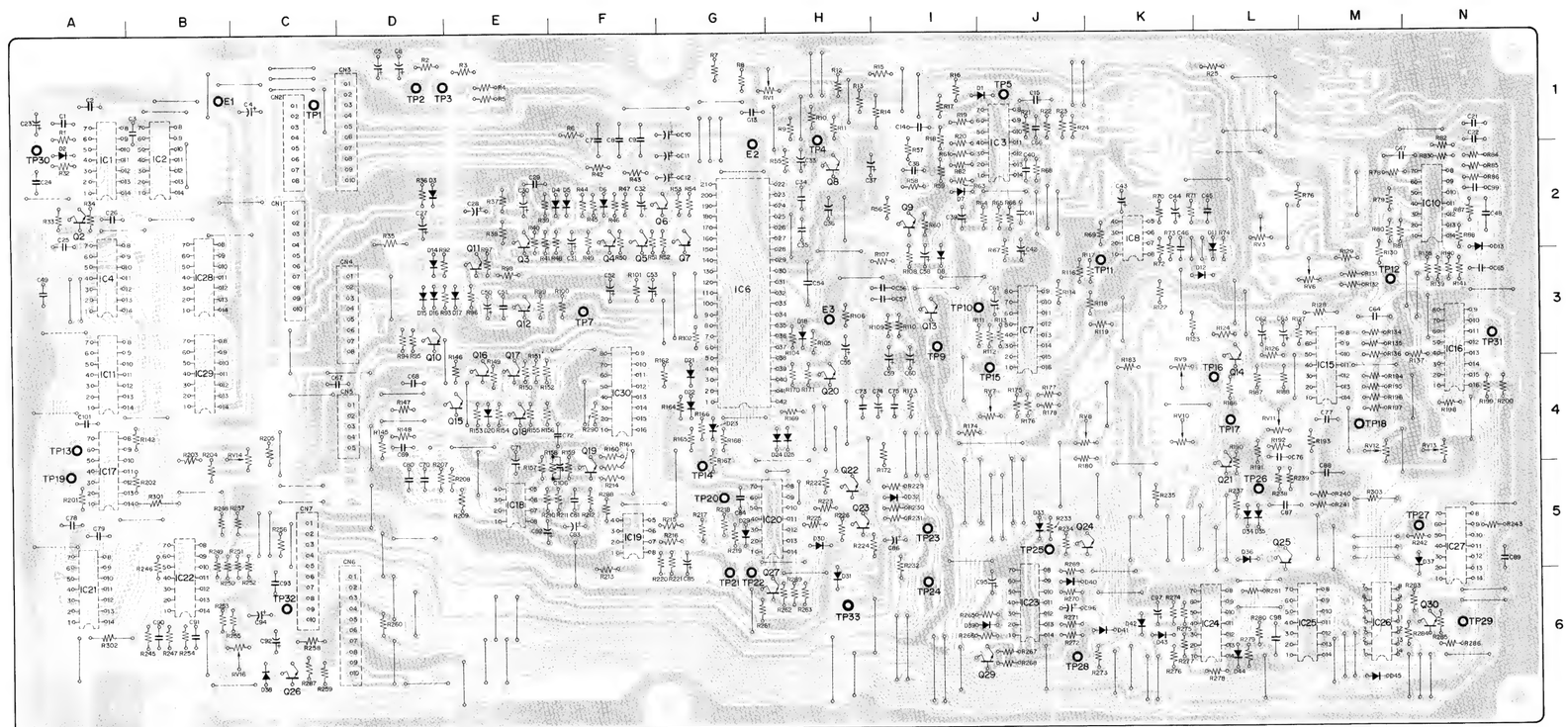


**SV-44** -SOLDERING SIDE-

SV-44 (SERVO SYSTEM)

13051 TO 15650 (U/C)

| | | | | | | | |
|---|---|---|---|---|---|---|---|
| CN1 | C - 2 | Q2 | A - 2 | | | | |
| CN2 | C - 1 | Q3 | E - 2 | | | | |
| CN3 | D - 1 | Q4 | F - 2 | | | | |
| CN4 | D - 3 | Q5 | F - 2 | | | | |
| CN5 | D - 4 | Q6 | G - 2 | | | | |
| CN6 | D - 6 | Q7 | G - 2 | | | | |
| CN7 | C - 5 | Q8 | H - 2 | | | | |
| | | Q9 | I - 2 | | | | |
| D1 | J - 1 | Q10 | D - 3 | | | | |
| D2 | A - 1 | Q11 | E - 3 | | | | |
| D3 | D - 2 | Q12 | E - 3 | | | | |
| D4 | F - 2 | Q13 | I - 3 | | | | |
| D5 | F - 2 | Q14 | L - 3 | | | | |
| D6 | F - 2 | Q15 | E - 4 | | | | |
| D7 | I - 2 | Q16 | E - 4 | | | | |
| D8 | I - 3 | Q17 | E - 4 | | | | |
| D11 | L - 2 | Q18 | E - 4 | | | | |
| D12 | L - 3 | Q19 | F - 4 | | | | |
| D13 | N - 2 | Q20 | H - 4 | | | | |
| D14 | D - 3 | Q21 | L - 4 | | | | |
| D15 | D - 3 | Q22 | H - 5 | | | | |
| D16 | D - 3 | Q23 | H - 5 | | | | |
| D17 | E - 3 | Q24 | J - 5 | | | | |
| D18 | H - 3 | Q25 | L - 5 | | | | |
| D20 | E - 4 | Q26 | C - 6 | | | | |
| D21 | G - 4 | Q27 | H - 6 | | | | |
| D22 | G - 4 | Q29 | J - 6 | | | | |
| D23 | G - 4 | Q30 | N - 6 | | | | |
| D24 | H - 4 | | | | | | |
| D25 | H - 4 | TP1 | C - 1 | | | | |
| D29 | G - 5 | TP2 | D - 1 | | | | |
| D30 | H - 5 | TP3 | D - 1 | | | | |
| D31 | H - 6 | TP4 | H - 1 | | | | |
| D32 | I - 5 | TP5 | J - 1 | | | | |
| D33 | J - 5 | TP7 | F - 3 | | | | |
| D34 | L - 5 | TP9 | I - 3 | | | | |
| D35 | L - 5 | TP10 | I - 3 | | | | |
| D36 | L - 5 | TP11 | K - 3 | | | | |
| D37 | N - 5 | TP12 | M - 3 | | | | |
| D38 | C - 6 | TP13 | A - 4 | | | | |
| D39 | J - 6 | TP14 | G - 4 | | | | |
| D40 | J - 6 | TP15 | J - 4 | | | | |
| D41 | K - 6 | TP16 | L - 4 | | | | |
| D42 | K - 6 | TP17 | L - 4 | | | | |
| D43 | K - 6 | TP18 | M - 4 | | | | |
| D44 | L - 6 | TP19 | A - 5 | | | | |
| D45 | M - 6 | TP20 | G - 5 | | | | |
| | | TP21 | G - 5 | | | | |
| E1 | B - 1 | TP22 | G - 5 | | | | |
| E2 | G - 1 | TP23 | I - 5 | | | | |
| E3 | H - 3 | TP24 | I - 6 | | | | |
| | | TP25 | J - 5 | | | | |
| IC1 | A - 2 | TP26 | L - 5 | | | | |
| IC2 | B - 2 | TP27 | N - 5 | | | | |
| IC3 | J - 1 | TP28 | J - 6 | | | | |
| IC4 | A - 3 | TP29 | N - 6 | | | | |
| IC6 | G - 3 | TP30 | A - 1 | | | | |
| IC7 | J - 3 | TP31 | N - 3 | | | | |
| IC8 | K - 2 | TP32 | C - 6 | | | | |
| IC10 | N - 2 | | | | | | |
| IC11 | A - 4 | RV1 | H - 1 | | | | |
| IC15 | M - 4 | RV3 | L - 2 | | | | |
| IC16 | N - 3 | RV6 | M - 3 | | | | |
| IC17 | A - 4 | RV7 | J - 4 | | | | |
| IC18 | E - 5 | RV8 | J - 4 | | | | |
| IC19 | F - 5 | RV9 | K - 4 | | | | |
| IC20 | H - 5 | RV10 | K - 4 | | | | |
| IC21 | A - 6 | RV11 | L - 4 | | | | |
| IC22 | B - 5 | RV12 | M - 4 | | | | |
| IC23 | J - 6 | RV13 | N - 4 | | | | |
| IC24 | L - 6 | RV14 | C - 4 | | | | |
| IC25 | M - 6 | RV16 | C - 6 | | | | |
| IC26 | M - 6 | | | | | | |
| IC27 | N - 5 | | | | | | |
| IC28 | B - 3 | | | | | | |
| IC29 | B - 4 | | | | | | |
| IC30 | F - 4 | | | | | | |

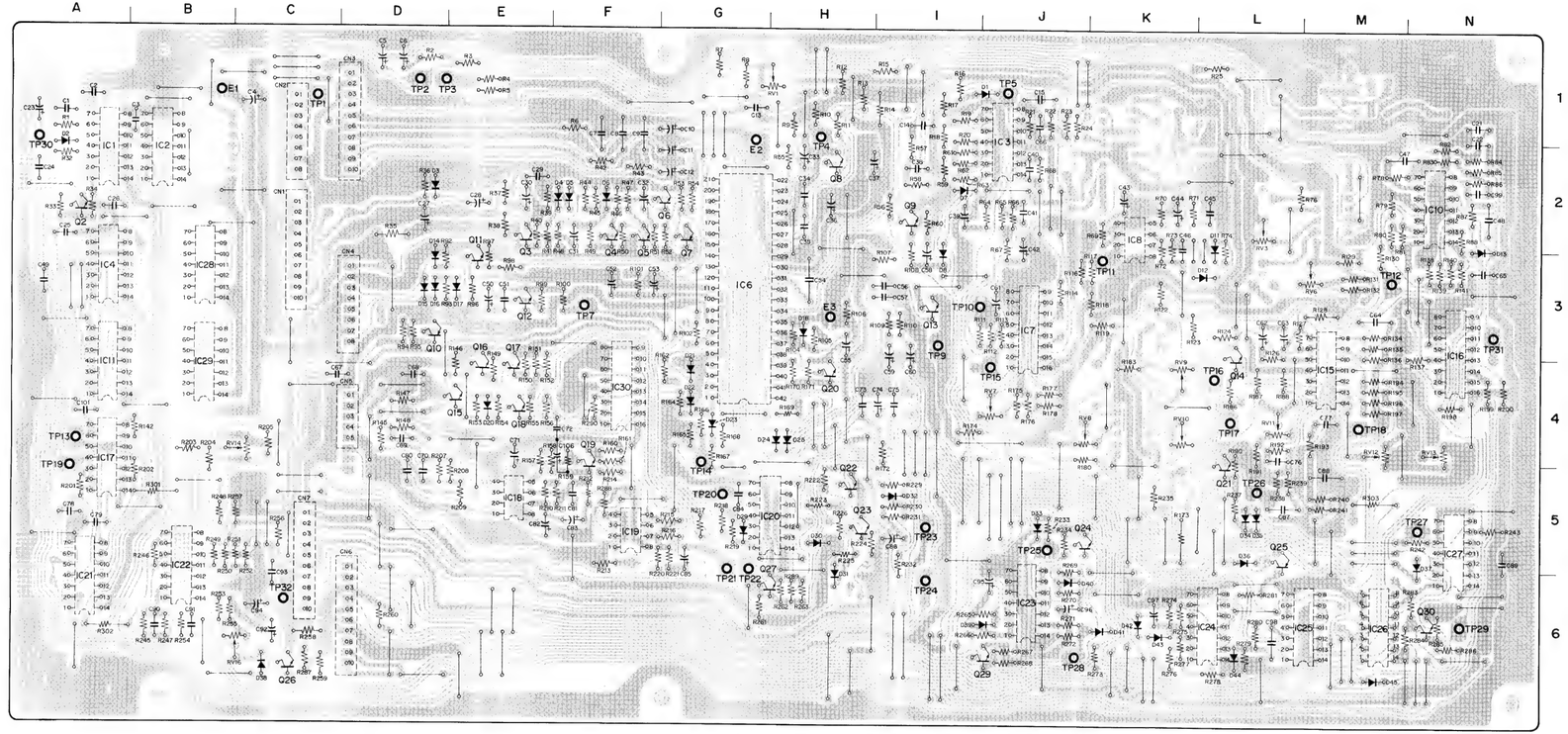


**SV-44** –SOLDERING SIDE–

## SV-44 (SERVO SYSTEM)

S/N 15651 AND LATER (U/C)

| | | | |
|---|---|---|---|
| CN1 | C - 2 | Q2 | A - 2 |
| CN2 | C - 1 | Q3 | E - 2 |
| CN3 | D - 1 | Q4 | F - 2 |
| CN4 | D - 3 | Q5 | F - 2 |
| CN5 | D - 4 | Q6 | G - 2 |
| CN6 | D - 6 | Q7 | G - 2 |
| CN7 | C - 5 | Q8 | H - 2 |
| | | Q9 | I - 2 |
| D1 | J - 1 | Q10 | D - 3 |
| D2 | A - 1 | Q11 | E - 3 |
| D3 | D - 2 | Q12 | E - 3 |
| D4 | F - 2 | Q13 | I - 3 |
| D5 | F - 2 | Q14 | L - 3 |
| D6 | F - 2 | Q15 | E - 4 |
| D7 | I - 2 | Q16 | E - 4 |
| D8 | I - 3 | Q17 | E - 4 |
| D11 | L - 2 | Q18 | E - 4 |
| D12 | L - 3 | Q19 | F - 4 |
| D13 | N - 2 | Q20 | H - 4 |
| D14 | D - 3 | Q21 | L - 4 |
| D15 | D - 3 | Q22 | H - 5 |
| D16 | D - 3 | Q23 | H - 5 |
| D17 | E - 3 | Q24 | J - 5 |
| D18 | H - 3 | Q25 | L - 5 |
| D20 | E - 4 | Q26 | C - 6 |
| D21 | G - 4 | Q27 | H - 6 |
| D22 | G - 4 | Q29 | J - 6 |
| D23 | G - 4 | Q30 | N - 6 |
| D24 | H - 4 | | |
| D25 | H - 4 | TP1 | C - 1 |
| D29 | G - 5 | TP2 | D - 1 |
| D30 | H - 5 | TP3 | D - 1 |
| D31 | H - 6 | TP4 | H - 1 |
| D32 | I - 5 | TP5 | J - 1 |
| D33 | J - 5 | TP7 | F - 3 |
| D34 | L - 5 | TP9 | I - 3 |
| D35 | L - 5 | TP10 | I - 3 |
| D36 | L - 5 | TP11 | K - 3 |
| D37 | N - 5 | TP12 | M - 3 |
| D38 | C - 6 | TP13 | A - 4 |
| D39 | J - 6 | TP14 | G - 4 |
| D40 | J - 6 | TP15 | J - 4 |
| D41 | K - 6 | TP16 | L - 4 |
| D42 | K - 6 | TP17 | L - 4 |
| D43 | K - 6 | TP18 | M - 4 |
| D45 | M - 6 | TP19 | A - 5 |
| | | TP20 | G - 5 |
| E1 | B - 1 | TP21 | G - 5 |
| E2 | G - 1 | TP22 | G - 5 |
| E3 | H - 3 | TP23 | I - 5 |
| | | TP24 | I - 6 |
| IC1 | A - 2 | TP25 | J - 5 |
| IC2 | B - 2 | TP26 | L - 5 |
| IC3 | J - 1 | TP27 | N - 5 |
| IC4 | A - 3 | TP28 | J - 6 |
| IC6 | G - 3 | TP29 | N - 6 |
| IC7 | J - 3 | TP30 | A - 1 |
| IC8 | K - 2 | TP31 | N - 3 |
| IC10 | N - 2 | TP32 | C - 6 |
| IC11 | A - 4 | TP34 | H - 5 |
| IC15 | M - 4 | | |
| IC16 | N - 3 | RV1 | H - 1 |
| IC17 | A - 4 | RV3 | L - 2 |
| IC18 | E - 5 | RV6 | M - 3 |
| IC19 | F - 5 | RV7 | J - 4 |
| IC20 | H - 5 | RV8 | J - 4 |
| IC21 | A - 6 | RV9 | K - 4 |
| IC22 | B - 5 | RV10 | K - 4 |
| IC23 | J - 6 | RV11 | L - 4 |
| IC24 | L - 6 | RV12 | M - 4 |
| IC25 | M - 6 | RV13 | N - 4 |
| IC26 | M - 6 | RV14 | C - 4 |
| IC27 | N - 5 | RV16 | C - 6 |
| IC28 | B - 3 | | |
| IC29 | B - 4 | | |
| IC30 | F - 4 | | |

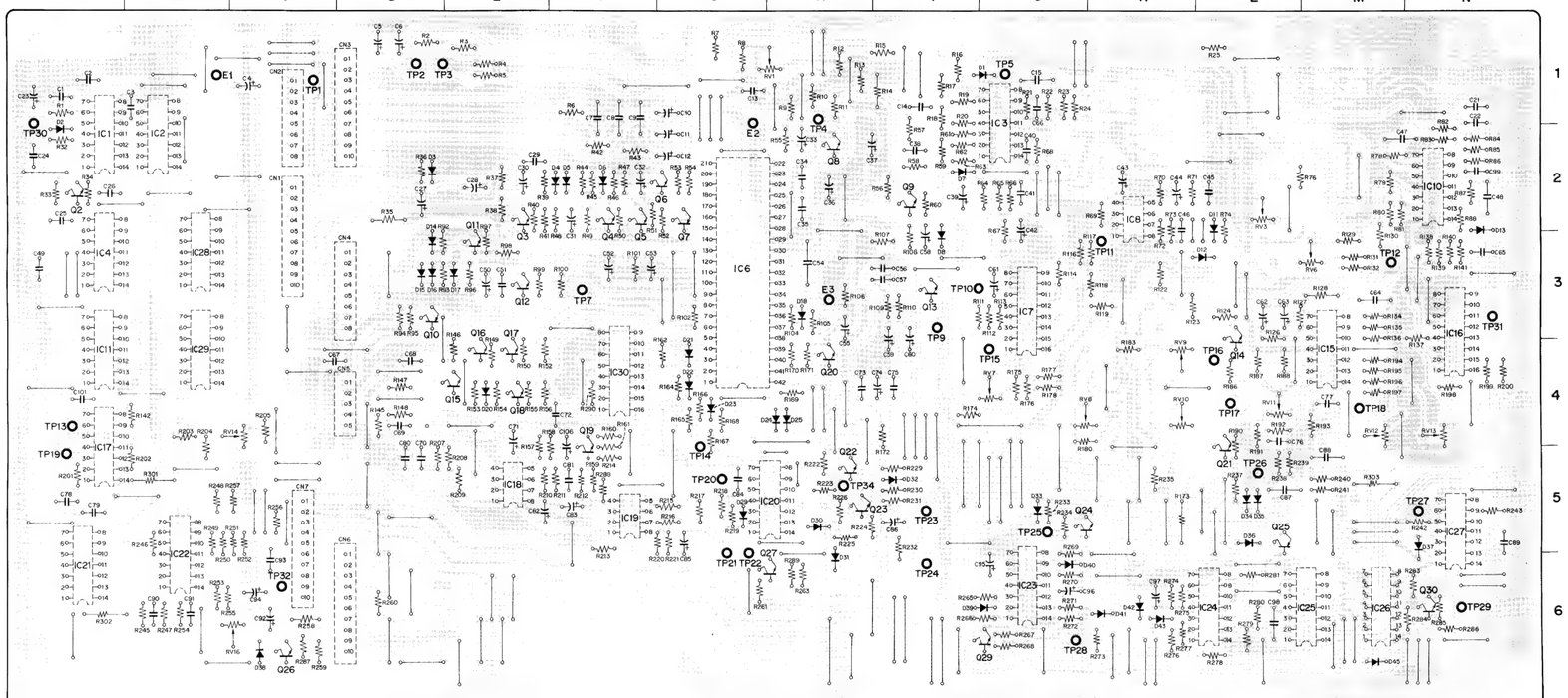


**SV-44** –SOLDERING SIDE–
1-606-373-16,17,18,19
VO-5600

## AC-26 (AC INPUT)

S/N UP TO 23850 (U/C)

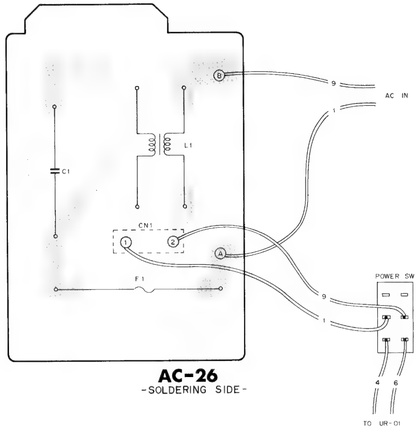


**AC-26**
-SOLDERING SIDE-

## AC-45 (AC INPUT)

S/N 23851 AND LATER (U/C)

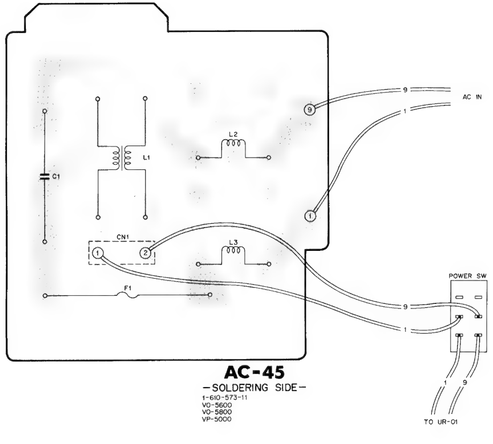


**AC-45**
-SOLDERING SIDE-
t-610-573-11
VO-5600
VO-5800
VP-5000

## UR-01 (SWITCHING REGULATOR)

(PW-67)
(PW-68)

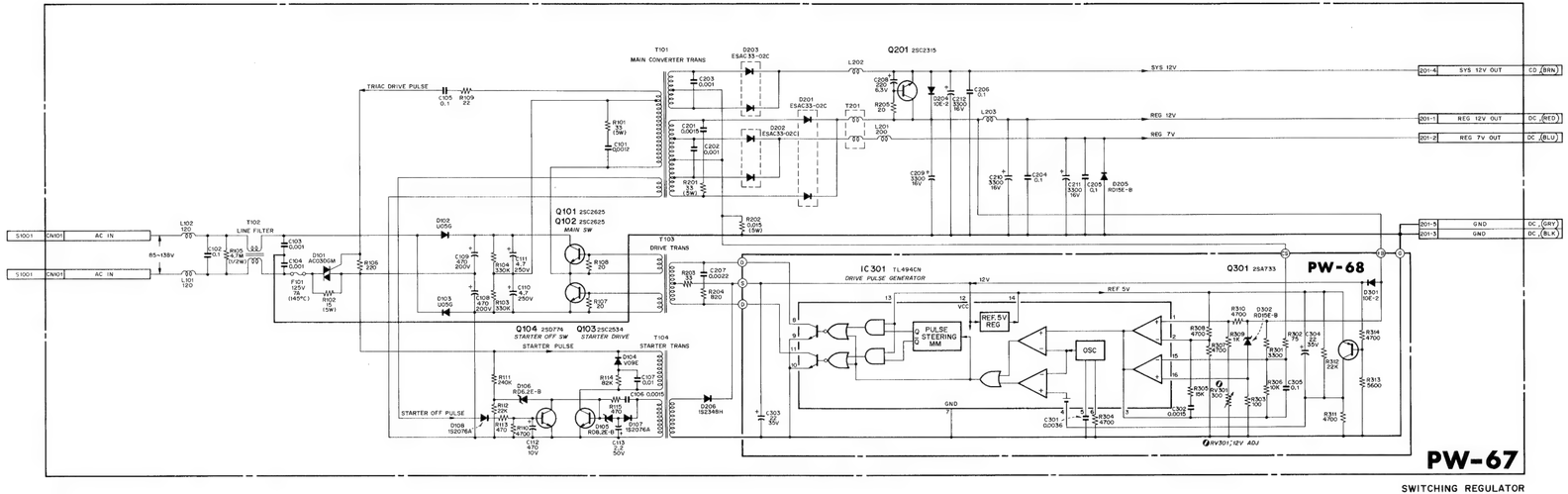


NOTE:

| MARK | CHANGE INFORMATION | SERIAL NO. |
|---|---|---|
| ※1 | R106 100 → 220<br>R109 33 → 22 | VO-5600 U/C: 23851 ~<br>" J: 11201 ~<br>VP-5000 U/C: 24851 ~<br>" J: 11201 ~ |

**NOTE: The shaded and ⚠ -marked components are critical to safety.**
**Replace only with same components as specified.**

## PD-16 (SOLENOID DRIVER / TAPE RUN DET)
## SW-43
## PH-4

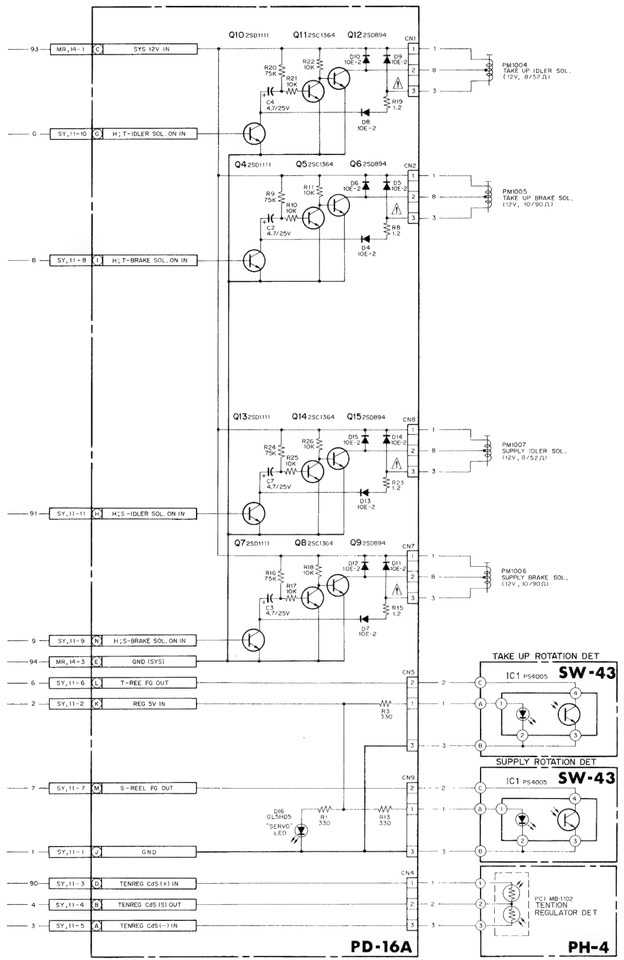


**NOTE** **The shaded and ⚠ -marked components are critical to safety. Replace only with same components as specified.**



## CN-42
## PH-5
## SW-50
## SW-46

**PH-5** – SOLDERING SIDE –

**PH-5** – SOLDERING SIDE –

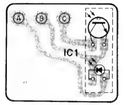


**SW-50** – SOLDERING SIDE –

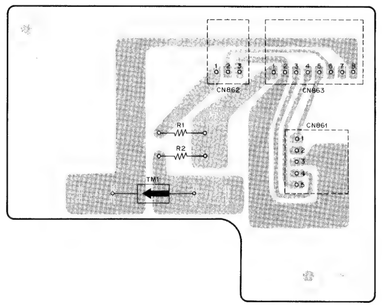


**CN-42** - SOLDERING SIDE -

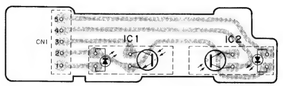


**SW-46** – SOLDERING SIDE –

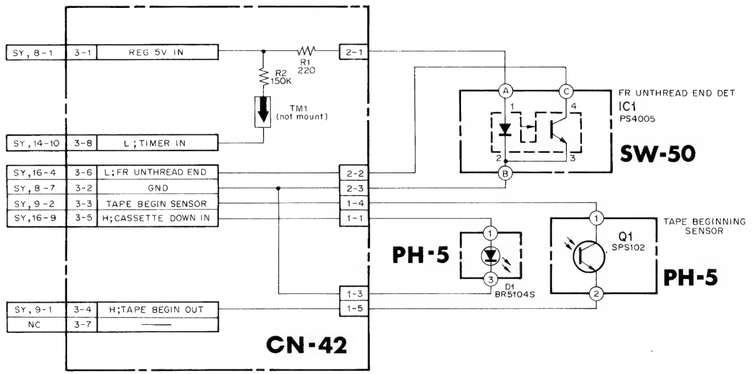




## CC-9
## CC-10
## CC-11

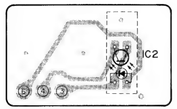


**CC-11** – SOLDERING SIDE –

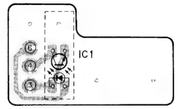


**CC-10** – SOLDERING SIDE –

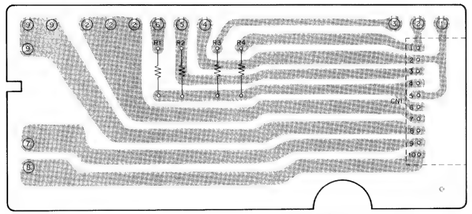

**CC-9** – SOLDERING SIDE –

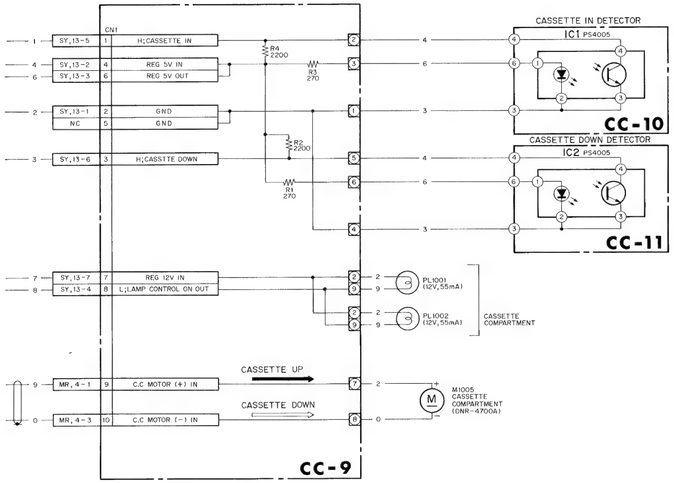

SY-75 SY-75

## SY-75 (SYSTEM CONTROL)

UP TO 10950 (U/C)

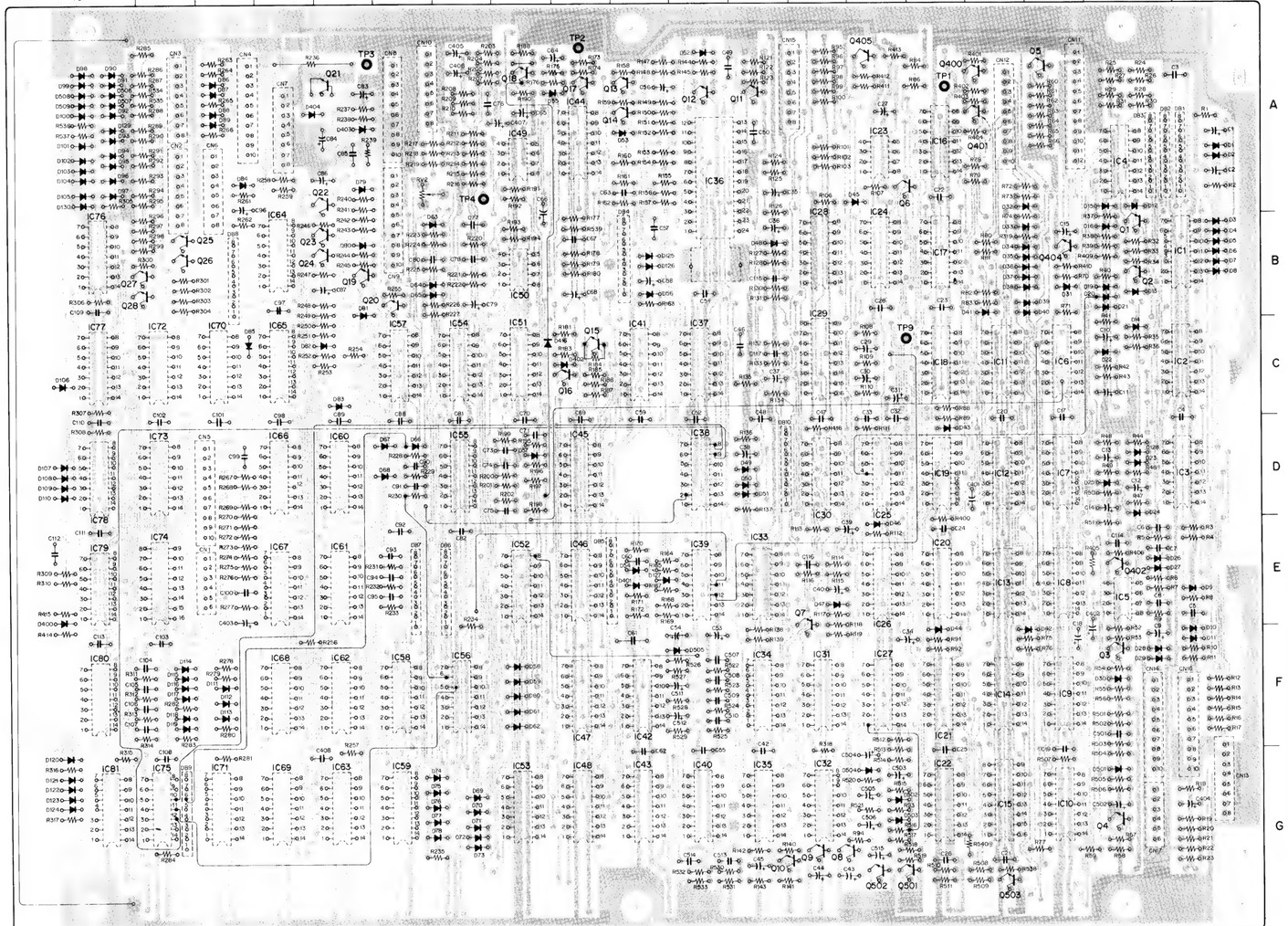

**SY-75** – SOLDERING SIDE –

| | | | | | | | |
|---|---|---|---|---|---|---|---|
| CN1 | E - 17 | D96 | A - 19 | IC62 | F - 15 | | |
| CN2 | A - 18 | D97 | A - 19 | IC63 | G - 15 | | |
| CN3 | A - 18 | D98 | A - 19 | IC64 | B - 16 | | |
| CN4 | A - 17 | D99 | A - 19 | IC65 | C - 16 | | |
| CN5 | D - 17 | D100 | A - 19 | IC66 | D - 16 | | |
| CN6 | A - 17 | D101 | A - 19 | IC67 | E - 16 | | |
| CN7 | A - 16 | D102 | A - 19 | IC68 | F - 16 | | |
| CN8 | A - 14 | D103 | A - 19 | IC69 | G - 16 | | |
| CN9 | B - 14 | D104 | A - 19 | IC70 | C - 17 | | |
| CN10 | A - 14 | D105 | A - 19 | IC71 | G - 17 | | |
| CN11 | A - 3 | D106 | C - 19 | IC72 | C - 18 | | |
| CN12 | A - 4 | D107 | D - 19 | IC73 | D - 18 | | |
| CN13 | G - 1 | D108 | D - 19 | IC74 | E - 18 | | |
| CN14 | F - 2 | D109 | D - 19 | IC75 | G - 18 | | |
| CN15 | A - 7 | D110 | D - 19 | IC76 | B - 19 | | |
| CN16 | F - 7 | D111 | F - 17 | IC77 | C - 19 | | |
| CN17 | G - 2 | D112 | F - 17 | IC78 | D - 19 | | |
| | | D113 | F - 17 | IC79 | E - 19 | | |
| D1 | A - 1 | D114 | F - 18 | IC80 | F - 19 | | |
| D2 | A - 1 | D115 | F - 18 | IC81 | G - 19 | | |
| D3 | B - 1 | D116 | F - 18 | | | | |
| D4 | B - 1 | D117 | F - 18 | Q1 | B - 2 | | |
| D5 | B - 1 | D118 | F - 18 | Q2 | B - 2 | | |
| D6 | B - 1 | D119 | F - 18 | Q3 | F - 2 | | |
| D7 | B - 1 | D120 | G - 19 | Q4 | G - 2 | | |
| D8 | B - 1 | D121 | G - 19 | Q5 | A - 3 | | |
| D9 | E - 1 | D122 | G - 19 | Q6 | A - 5 | | |
| D10 | F - 1 | D123 | G - 19 | Q7 | E - 7 | | |
| D11 | F - 1 | D124 | G - 19 | Q8 | G - 7 | | |
| D12 | A - 2 | D125 | B - 10 | Q9 | G - 7 | | |
| D13 | B - 2 | D126 | B - 10 | Q10 | G - 8 | | |
| D14 | C - 2 | D127 | E - 10 | Q11 | A - 8 | | |
| D15 | A - 2 | D128 | D - 2 | Q12 | A - 9 | | |
| D16 | B - 2 | D130 | A - 19 | Q13 | A - 10 | | |
| D19 | B - 2 | D400 | E - 19 | Q14 | A - 10 | | |
| D20 | B - 2 | D401 | E - 10 | Q15 | C - 11 | | |
| D21 | B - 2 | D402 | C - 11 | Q16 | C - 11 | | |
| D22 | C - 2 | D403 | A - 15 | Q17 | A - 11 | | |
| D23 | D - 2 | D404 | A - 16 | Q18 | A - 12 | | |
| D24 | D - 2 | D416 | C - 12 | Q19 | B - 15 | | |
| D25 | D - 2 | D501 | G - 2 | Q20 | B - 14 | | |
| D26 | E - 2 | D502 | G - 6 | Q21 | A - 15 | | |
| D27 | E - 2 | D503 | G - 6 | Q22 | C - 15 | | |
| D28 | F - 2 | D504 | G - 6 | Q23 | B - 15 | | |
| D29 | F - 2 | D505 | F - 9 | Q24 | B - 15 | | |
| D30 | F - 2 | D506 | A - 19 | Q25 | B - 18 | | |
| D31 | B - 3 | D507 | A - 19 | Q26 | B - 18 | | |
| D32 | A - 4 | D508 | A - 19 | Q27 | B - 18 | | |
| D33 | B - 4 | D509 | A - 19 | Q28 | B - 18 | | |
| D34 | B - 4 | | | Q400 | A - 4 | | |
| D35 | B - 4 | IC1 | B - 1 | Q401 | A - 4 | | |
| D36 | B - 4 | IC2 | C - 1 | Q402 | E - 2 | | |
| D37 | B - 4 | IC3 | D - 1 | Q404 | B - 3 | | |
| D38 | B - 4 | IC4 | A - 2 | Q405 | A - 6 | | |
| D39 | B - 4 | IC5 | E - 2 | Q501 | G - 6 | | |
| D40 | B - 4 | IC6 | C - 3 | Q502 | G - 6 | | |
| D41 | B - 4 | IC7 | D - 3 | Q503 | G - 4 | | |
| D42 | F - 3 | IC8 | E - 3 | | | | |
| D43 | D - 5 | IC9 | F - 3 | RV2 | A - 14 | | |
| D44 | F - 5 | IC10 | G - 3 | | | | |
| D45 | A - 6 | IC11 | C - 4 | TP1 | A - 5 | | |
| D46 | E - 6 | IC12 | D - 4 | TP2 | A - 11 | | |
| D47 | E - 7 | IC13 | E - 4 | TP3 | A - 15 | | |
| D48 | B - 8 | IC14 | F - 4 | TP4 | A - 13 | | |
| D49 | D - 8 | IC15 | G - 4 | TP9 | C - 6 | | |
| D50 | D - 8 | IC16 | A - 5 | | | | |
| D51 | D - 8 | IC17 | B - 5 | | | | |
| D52 | A - 9 | IC18 | C - 5 | | | | |
| D53 | A - 10 | IC19 | D - 5 | | | | |
| D54 | F - 9 | IC20 | E - 5 | | | | |
| D55 | A - 11 | IC21 | F - 5 | | | | |
| D56 | B - 10 | IC22 | G - 5 | | | | |
| D57 | D - 12 | IC23 | A - 6 | | | | |
| D58 | F - 12 | IC24 | B - 6 | | | | |
| D59 | F - 12 | IC26 | E - 6 | | | | |
| D60 | F - 12 | IC27 | F - 6 | | | | |
| D61 | F - 12 | IC28 | B - 7 | | | | |
| D62 | F - 12 | IC29 | C - 7 | | | | |
| D63 | B - 13 | IC30 | D - 7 | | | | |
| D64 | B - 13 | IC31 | F - 7 | | | | |
| D65 | B - 13 | IC32 | G - 7 | | | | |
| D66 | D - 14 | IC33 | E - 8 | | | | |
| D67 | D - 14 | IC34 | F - 8 | | | | |
| D68 | D - 14 | IC35 | G - 8 | | | | |
| D69 | G - 13 | IC36 | A - 9 | | | | |
| D70 | G - 13 | IC37 | C - 9 | | | | |
| D71 | G - 13 | IC38 | D - 9 | | | | |
| D72 | G - 13 | IC39 | E - 9 | | | | |
| D73 | G - 13 | IC40 | G - 9 | | | | |
| D74 | G - 13 | IC41 | C - 10 | | | | |
| D75 | G - 13 | IC42 | F - 10 | | | | |
| D76 | G - 13 | IC43 | G - 10 | | | | |
| D77 | G - 13 | IC44 | A - 11 | | | | |
| D78 | G - 13 | IC45 | D - 11 | | | | |
| D79 | A - 15 | IC46 | E - 11 | | | | |
| D80 | B - 15 | IC47 | F - 11 | | | | |
| D81 | B - 15 | IC48 | D - 11 | | | | |
| D82 | C - 15 | IC49 | A - 12 | | | | |
| D83 | C - 15 | IC50 | B - 12 | | | | |
| D84 | A - 17 | IC51 | C - 12 | | | | |
| D85 | C - 17 | IC52 | E - 12 | | | | |
| D86 | A - 17 | IC53 | G - 12 | | | | |
| D87 | A - 17 | IC54 | C - 13 | | | | |
| D88 | A - 17 | IC55 | D - 13 | | | | |
| D89 | A - 17 | IC56 | F - 13 | | | | |
| D90 | A - 19 | IC57 | C - 14 | | | | |
| D91 | A - 19 | IC58 | F - 14 | | | | |
| D92 | A - 19 | IC59 | G - 14 | | | | |
| D93 | A - 19 | IC60 | D - 15 | | | | |
| D94 | A - 19 | IC61 | E - 15 | | | | |
| D95 | A - 19 | | | | | | |

| REF. NO | TYPE. | 12V PIN | 5V PIN | GND PIN |
|---|---|---|---|---|
| IC1 | TC4081BP | | 14 | 7 |
| IC2 | TC4001BP | | 14 | 7 |
| IC3 | TC4081BP | | 14 | 7 |
| IC4 | M54529P | | 14 | 7 |
| IC5 | μPC4558C | 8 | | 4 |
| IC6 | TC4069UBP | | 14 | 7 |
| IC7 | TC4081BP | | 14 | 7 |
| IC8 | TC4001BP | | 14 | 7 |
| IC9 | M54529P | | 14 | 7 |
| IC10 | M54529P | | 14 | 7 |
| IC11 | TC4081BP | | 14 | 7 |
| IC12 | TC4011BP | | 14 | 7 |
| IC13 | TC4071BP | | 14 | 7 |
| IC14 | TC4001BP | | 14 | 7 |
| IC15 | M54519P | | | |
| IC16 | TC4011BP | | 14 | 7 |
| IC17 | TC4001BP | | 14 | 7 |
| IC18 | TC4073BP | | 14 | 7 |
| IC19 | TC4001BP | | 14 | 7 |
| IC20 | TC4081BP | | 14 | 7 |
| IC21 | TC4011BP | | 14 | 7 |
| IC22 | TC4069UBP | | 14 | 7 |
| IC23 | μPC4558C | 8 | | 4 |
| IC24 | TC4081BP | | 14 | 7 |
| IC25 | TC4001BP | | 14 | 7 |
| IC26 | TC4071BP | | 14 | 7 |
| IC27 | TC4001BP | | 14 | 7 |
| IC28 | TC4069UBP | | 14 | 7 |
| IC29 | HD14538BP | | 16 | 8 |
| IC30 | TC4069UBP | | 14 | 7 |
| IC31 | TC4069UBP | | 14 | 7 |
| IC32 | TC4081BP | | 14 | 7 |
| IC33 | TC4075BP | | 14 | 7 |
| IC34 | TC4001BP | | 14 | 7 |
| IC35 | TC4001BP | | 14 | 7 |
| IC36 | CX757 | | | |
| IC37 | TC4081BP | | 14 | 7 |
| IC38 | TC4025BP | | 14 | 7 |
| IC39 | TC4030BP | | 14 | 7 |
| IC40 | TC4069UBP | | 14 | 7 |
| IC41 | TC4073BP | | 14 | 7 |
| IC42 | TC4001BP | | 14 | 7 |
| IC43 | TC4011BP | | 14 | 7 |
| IC44 | M54529P | | 14 | 7 |
| IC45 | TC4081BP | | 14 | 7 |
| IC46 | TC4081BP | | 14 | 7 |
| IC47 | TC4081BP | | 14 | 7 |
| IC48 | TC4011BP | | 14 | 7 |
| IC49 | NJM2903D | | | |
| IC50 | NJM4558D-D | 8 | | 4 |
| IC51 | M54529P | | 14 | 7 |
| IC52 | TC4069UBP | | 14 | 7 |
| IC53 | TC4012BP | | 14 | 7 |
| IC54 | TC4011BP | | 14 | 7 |
| IC55 | TC4013BP | | 14 | 7 |
| IC56 | TC4069UBP | | 14 | 7 |
| IC57 | M54529P | | 14 | 7 |
| IC58 | TC4001BP | | 14 | 7 |
| IC59 | TC4081BP | | 14 | 7 |
| IC60 | TC4081BP | | 14 | 7 |
| IC61 | TC4081BP | | 14 | 7 |
| IC62 | TC4069UBP | | 14 | 7 |
| IC63 | TC4071BP | | 14 | 7 |
| IC64 | M54529P | | 14 | 7 |
| IC65 | M54529P | | 14 | 7 |
| IC66 | TC4069UBP | | 14 | 7 |
| IC67 | M54529P | | 14 | 7 |
| IC68 | TC4011BP | | 14 | 7 |
| IC69 | TC4001BP | | 14 | 7 |
| IC70 | TC4081BP | | 14 | 7 |
| IC71 | TC4081BP | | 14 | 7 |
| IC72 | TC4013BP | | 14 | 7 |
| IC73 | TC4073BP | | 14 | 7 |
| IC74 | TC4520BP | | 16 | 8 |
| IC75 | TC4001BP | | 14 | 7 |
| IC76 | M54529P | | 14 | 7 |
| IC77 | TC4081BP | | 14 | 7 |
| IC78 | TC4025BP | | 14 | 7 |
| IC79 | TC4069UBP | | 14 | 7 |
| IC80 | TC4001BP | | 14 | 7 |
| IC81 | TC4011BP | | 14 | 7 |
| IC506 | TC4001BP | | 14 | 7 |

SY-75 SY-75

SY-75 (SYSTEM CONTROL)

S/N 10951 TO 18450 (U/C)

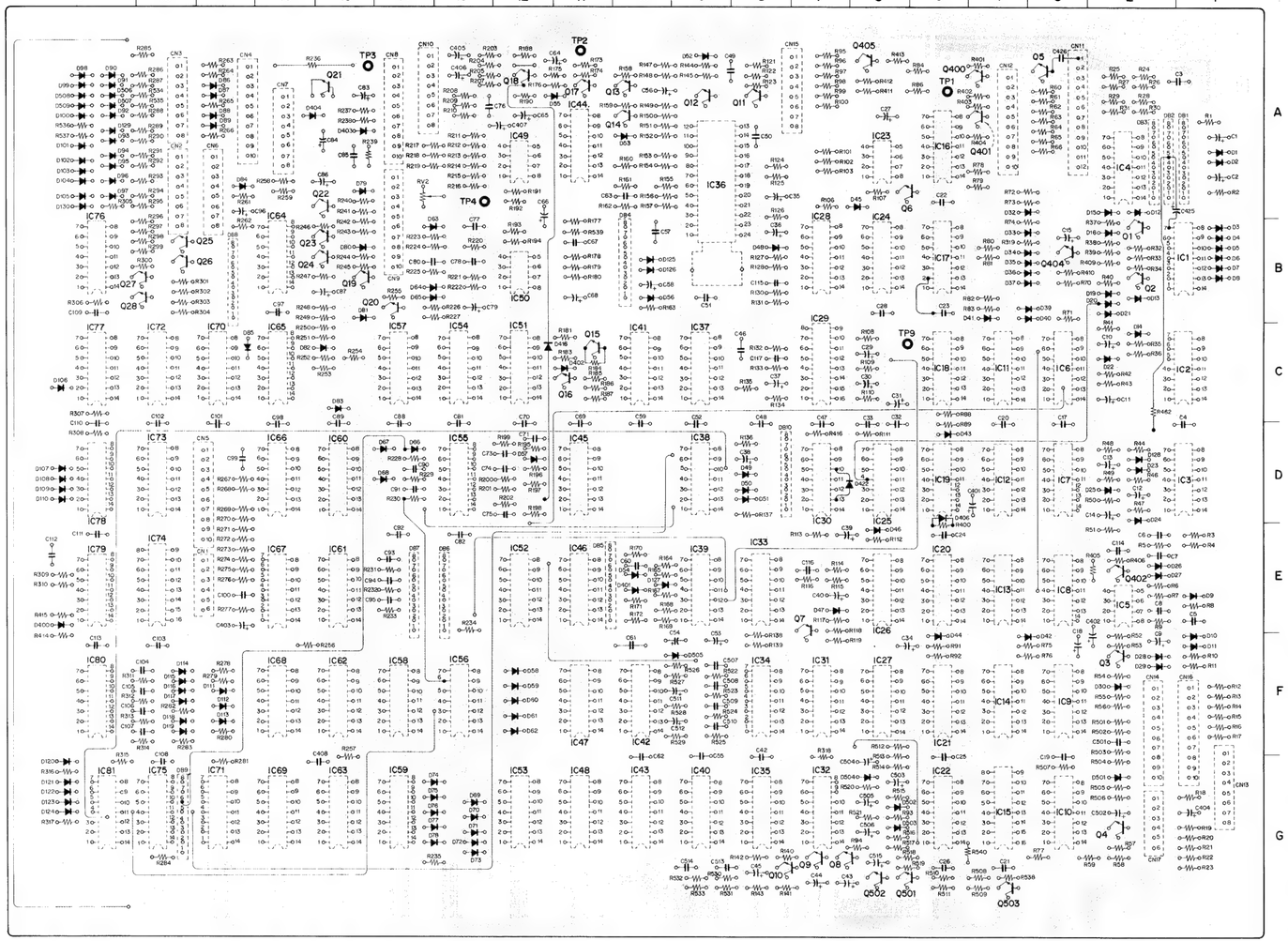

SY-75 – SOLDERING SIDE –

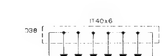

| | CN1 | E - 17 | D98 | A - 19 | IC62 | F - 15 |
|---|---|---|---|---|---|---|
| | CN2 | A - 18 | D99 | A - 19 | IC63 | G - 15 |
| | CN3 | A - 18 | D100 | A - 19 | IC64 | B - 16 |
| | CN4 | A - 17 | D101 | A - 19 | IC65 | C - 16 |
| | CN5 | D - 17 | D102 | A - 19 | IC66 | D - 16 |
| | CN6 | A - 17 | D103 | A - 19 | IC67 | E - 16 |
| | CN7 | A - 16 | D104 | A - 19 | IC68 | F - 16 |
| | CN8 | A - 14 | D105 | A - 19 | IC69 | G - 16 |
| | CN9 | B - 14 | D106 | C - 19 | IC70 | C - 17 |
| | CN10 | A - 14 | D107 | D - 19 | IC71 | G - 17 |
| | CN11 | A - 3 | D108 | D - 19 | IC72 | C - 18 |
| | CN12 | A - 4 | D109 | D - 19 | IC73 | D - 18 |
| | CN13 | G - 1 | D110 | D - 19 | IC74 | E - 18 |
| | CN14 | F - 2 | D111 | F - 17 | IC75 | E - 18 |
| | CN15 | A - 7 | D112 | F - 17 | IC76 | B - 19 |
| | CN16 | F - 1 | D113 | F - 17 | IC77 | C - 19 |
| | CN17 | G - 2 | D114 | F - 18 | IC78 | D - 19 |
| | | | D115 | F - 18 | IC79 | E - 19 |
| | D1 | A - 1 | D116 | F - 18 | IC80 | F - 19 |
| | D2 | A - 1 | D117 | F - 18 | IC81 | G - 19 |
| | D3 | B - 1 | D118 | F - 18 | | |
| | D4 | B - 1 | D119 | F - 18 | Q1 | B - 2 |
| | D5 | B - 1 | D120 | G - 19 | Q2 | B - 2 |
| | D6 | B - 1 | D121 | G - 19 | Q3 | F - 2 |
| | D7 | B - 1 | D122 | G - 19 | Q4 | G - 2 |
| | D8 | B - 1 | D123 | G - 19 | Q5 | A - 3 |
| | D9 | E - 1 | D124 | G - 19 | Q6 | A - 5 |
| | D10 | F - 1 | D125 | B - 10 | Q7 | E - 7 |
| | D11 | F - 1 | D126 | B - 10 | Q8 | G - 7 |
| | D12 | A - 2 | D127 | E - 10 | Q9 | G - 7 |
| | D13 | B - 2 | D128 | D - 2 | Q10 | G - 8 |
| | D14 | C - 2 | D130 | A - 19 | Q11 | A - 8 |
| | D15 | A - 2 | D400 | E - 19 | Q12 | A - 9 |
| | D16 | B - 2 | D401 | E - 10 | Q13 | A - 10 |
| | D19 | B - 2 | D402 | C - 11 | Q14 | A - 10 |
| | D20 | B - 2 | D403 | A - 15 | Q15 | C - 11 |
| | D21 | B - 2 | D404 | A - 16 | Q16 | C - 11 |
| | D22 | C - 2 | D406 | D - 5 | Q17 | A - 11 |
| | D23 | D - 2 | D416 | C - 12 | Q18 | A - 12 |
| | D24 | D - 2 | D422 | D - 7 | Q19 | B - 15 |
| | D25 | D - 2 | D501 | G - 2 | Q20 | B - 14 |
| | D26 | E - 2 | D502 | G - 6 | Q21 | A - 15 |
| | D27 | E - 2 | D503 | G - 6 | Q22 | A - 15 |
| | D28 | F - 2 | D504 | G - 6 | Q23 | B - 15 |
| | D29 | F - 2 | D505 | F - 9 | Q24 | B - 15 |
| | D30 | F - 2 | D506 | A - 19 | Q25 | B - 18 |
| | D32 | A - 4 | D507 | A - 19 | Q26 | B - 18 |
| | D33 | B - 4 | D508 | A - 19 | Q27 | B - 18 |
| | D34 | B - 4 | D509 | A - 19 | Q28 | B - 18 |
| | D35 | B - 4 | | | Q400 | A - 4 |
| | D36 | B - 4 | IC1 | B - 1 | Q401 | A - 4 |
| | D37 | B - 4 | IC2 | C - 1 | Q402 | E - 2 |
| | D39 | B - 4 | IC3 | D - 1 | Q404 | E - 3 |
| | D40 | B - 4 | IC4 | A - 2 | Q405 | A - 6 |
| | D41 | B - 4 | IC5 | E - 2 | Q501 | G - 6 |
| | D42 | F - 3 | IC6 | C - 3 | Q502 | G - 6 |
| | D43 | D - 5 | IC7 | D - 3 | Q503 | G - 4 |
| | D44 | F - 5 | IC8 | E - 3 | | |
| | D45 | A - 6 | IC9 | F - 3 | RV2 | A - 14 |
| | D46 | E - 6 | IC10 | G - 3 | | |
| | D47 | E - 7 | IC11 | C - 4 | TP1 | A - 5 |
| | D48 | B - 8 | IC12 | D - 4 | TP2 | A - 11 |
| | D49 | D - 8 | IC13 | E - 4 | TP3 | A - 15 |
| | D50 | D - 8 | IC14 | F - 4 | TP4 | A - 13 |
| | D51 | D - 8 | IC15 | G - 4 | TP9 | C - 6 |
| | D52 | A - 9 | IC16 | A - 5 | | |
| | D53 | A - 10 | IC17 | B - 5 | | |
| | D54 | F - 9 | IC18 | D - 5 | | |
| | D55 | A - 11 | IC19 | D - 5 | | |
| | D56 | B - 10 | IC20 | E - 5 | | |
| | D57 | D - 12 | IC21 | F - 5 | | |
| | D58 | F - 12 | IC22 | G - 5 | | |
| | D59 | F - 12 | IC23 | A - 6 | | |
| | D60 | F - 12 | IC24 | B - 6 | | |
| | D61 | F - 12 | IC25 | D - 6 | | |
| | D62 | F - 12 | IC26 | E - 6 | | |
| | D63 | B - 13 | IC27 | F - 6 | | |
| | D64 | B - 13 | IC28 | B - 7 | | |
| | D65 | B - 13 | IC29 | C - 7 | | |
| | D66 | D - 14 | IC30 | D - 7 | | |
| | D67 | D - 14 | IC31 | F - 7 | | |
| | D68 | D - 14 | IC32 | G - 7 | | |
| | D69 | G - 13 | IC33 | E - 8 | | |
| | D70 | G - 13 | IC34 | F - 8 | | |
| | D71 | G - 13 | IC35 | G - 8 | | |
| | D72 | G - 13 | IC36 | A - 9 | | |
| | D73 | G - 13 | IC37 | C - 9 | | |
| | D74 | G - 13 | IC38 | D - 9 | | |
| | D75 | G - 13 | IC39 | E - 9 | | |
| | D76 | G - 13 | IC40 | G - 9 | | |
| | D77 | G - 13 | IC41 | C - 10 | | |
| | D78 | G - 13 | IC42 | F - 10 | | |
| | D79 | A - 15 | IC43 | G - 10 | | |
| | D80 | B - 15 | IC44 | A - 11 | | |
| | D81 | B - 15 | IC45 | D - 11 | | |
| | D82 | C - 15 | IC46 | E - 11 | | |
| | D83 | C - 15 | IC47 | F - 11 | | |
| | D84 | A - 17 | IC48 | G - 11 | | |
| | D85 | C - 17 | IC49 | A - 12 | | |
| | D86 | A - 17 | IC50 | B - 12 | | |
| | D87 | A - 17 | IC51 | C - 12 | | |
| | D88 | A - 17 | IC52 | E - 12 | | |
| | D89 | A - 17 | IC53 | G - 12 | | |
| | D90 | A - 19 | IC54 | C - 13 | | |
| | D91 | A - 19 | IC55 | D - 13 | | |
| | D92 | A - 19 | IC56 | F - 13 | | |
| | D93 | A - 19 | IC57 | C - 14 | | |
| | D94 | A - 19 | IC58 | F - 14 | | |
| | D95 | A - 19 | IC59 | G - 14 | | |
| | D96 | A - 19 | IC60 | D - 15 | | |
| | D97 | A - 19 | IC61 | E - 15 | | |

| REF. NO | TYPE. | 12V PIN | 5V PIN | GND PIN |
|---|---|---|---|---|
| IC1 | TC4081BP | | 14 | 7 |
| IC2 | TC4001BP | | 14 | 7 |
| IC3 | TC4081BP | | 14 | 7 |
| IC4 | M54529P | | 14 | 7 |
| IC5 | μPC4558C | 8 | | 4 |
| IC6 | TC4069UBP | | 14 | 7 |
| IC7 | TC4081BP | | 14 | 7 |
| IC8 | TC4001BP | | 14 | 7 |
| IC9 | M54529P | | 14 | 7 |
| IC10 | M54529P | | 14 | 7 |
| IC11 | TC4081BP | | 14 | 7 |
| IC12 | TC4011BP | | 14 | 7 |
| IC13 | TC4077BP | | 14 | 7 |
| IC14 | TC4001BP | | 14 | 7 |
| IC15 | M54519P | | | |
| IC16 | TC4011BP | | 14 | 7 |
| IC17 | TC4071BP | | 14 | 7 |
| IC18 | TC4073BP | | 14 | 7 |
| IC19 | TC4001BP | | 14 | 7 |
| IC20 | TC4081BP | | 14 | 7 |
| IC21 | TC4001BP | | 14 | 7 |
| IC22 | TC4069UBP | | 14 | 7 |
| IC23 | μPC4558C | 8 | | 4 |
| IC24 | TC4001BP | | 14 | 7 |
| IC25 | TC4001BP | | 14 | 7 |
| IC26 | TC4071BP | | 14 | 7 |
| IC27 | TC4001BP | | 14 | 7 |
| IC28 | TC4069UBP | | 14 | 7 |
| IC29 | HD14538BP | | 16 | 8 |
| IC30 | TC4069UBP | | 14 | 7 |
| IC31 | TC4069UBP | | 14 | 7 |
| IC32 | TC4081BP | | 14 | 7 |
| IC33 | TC4075BP | | 14 | 7 |
| IC34 | TC4001BP | | 14 | 7 |
| IC35 | TC4081BP | | 14 | 7 |
| IC36 | CX7557 | | | |
| IC37 | TC4081BP | | 14 | 7 |
| IC38 | TC4025BP | | 14 | 7 |
| IC39 | TC4030BP | | 14 | 7 |
| IC40 | TC4069UBP | | 14 | 7 |
| IC41 | TC4073BP | | 14 | 7 |
| IC42 | TC4001BP | | 14 | 7 |
| IC43 | TC4011BP | | 14 | 7 |
| IC44 | M54529P | | 14 | 7 |
| IC45 | TC4081BP | | 14 | 7 |
| IC46 | TC4081BP | | 14 | 7 |
| IC47 | TC4081BP | | 14 | 7 |
| IC48 | TC4011BP | | 14 | 7 |
| IC49 | NJM2903D | | 14 | 7 |
| IC50 | NJM4558D-D | 8 | | 4 |
| IC51 | M54529P | | 14 | 7 |
| IC52 | TC4069UBP | | 14 | 7 |
| IC53 | TC4012BP | | 14 | 7 |
| IC54 | TC4011BP | | 14 | 7 |
| IC55 | TC4013BP | | 14 | 7 |
| IC56 | TC4069UBP | | 14 | 7 |
| IC57 | M54529P | | 14 | 7 |
| IC58 | TC4001BP | | 14 | 7 |
| IC59 | TC4081BP | | 14 | 7 |
| IC60 | TC4011BP | | 14 | 7 |
| IC61 | TC4081BP | | 14 | 7 |
| IC62 | TC4069UBP | | 14 | 7 |
| IC63 | TC4071BP | | 14 | 7 |
| IC64 | M54529P | | 14 | 7 |
| IC65 | M54529P | | 14 | 7 |
| IC66 | TC4069UBP | | 14 | 7 |
| IC67 | M54529P | | 14 | 7 |
| IC68 | TC4011BP | | 14 | 7 |
| IC69 | TC4001BP | | 14 | 7 |
| IC70 | TC4081BP | | 14 | 7 |
| IC71 | TC4081BP | | 14 | 7 |
| IC72 | TC4013BP | | 14 | 7 |
| IC73 | TC4073BP | | 14 | 7 |
| IC74 | TC4520BP | | 14 | 7 |
| IC75 | TC4001BP | | 14 | 7 |
| IC76 | M54529P | | 14 | 7 |
| IC77 | TC4081BP | | 14 | 7 |
| IC78 | TC4025BP | | 14 | 7 |
| IC79 | TC4069UBP | | 14 | 7 |
| IC80 | TC4001BP | | 14 | 7 |
| IC81 | TC4011BP | | 14 | 7 |
| IC506 | TC4001BP | | 14 | 7 |

SY-75 (1/4)

SY-75 (1/4)
(SYSTEM CONTROL)

S/N UP TO 18450 (U/C)

NOTE:

| MARK | CHANGE INFORMATION | SERIAL NO. |
|---|---|---|
| ※1 | D31, D38 ) 1S1555 DELETED<br>D406, D422 ) 1S1555 ADDED<br>R8, R14, R15, R16 ) 2200 → 1K<br>R239 750 → 680<br>C425 4.7/50V ADDED<br>C426 0.022 ADDED<br>R462 27K ADDED<br>CHANGED CONNECTION<br>IC11-4 ···· IC17-2<br>SHORT<br>OPEN<br>(IC17-2 · GND) | VO 5600 U/C: 14151 ~<br>··· J: 10401 ~<br>VO 5630 AEP: 12341 ~<br>··· UK: 10311 ~<br>··· U/C: 10201 ~ |

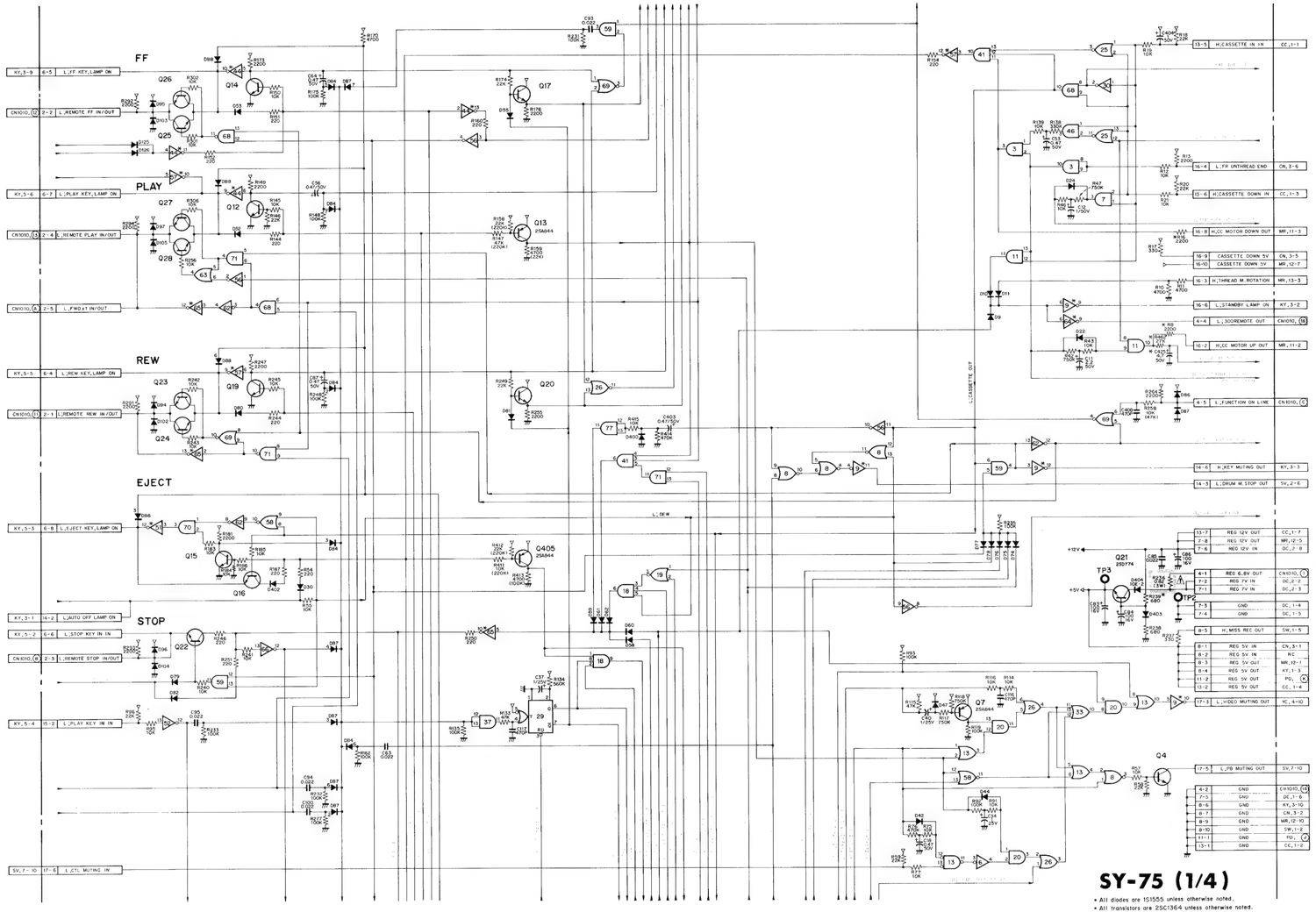


NOTE: The shaded and ⚠ -marked components are critical to safety.
Replace only with same components as specified.



REVISED '83. 9

SY-75 (2/4)
(SYSTEM CONTROL)

S/N UP TO 18450 (U/C)

SY-75 (2/4) SY-75 (2/4)

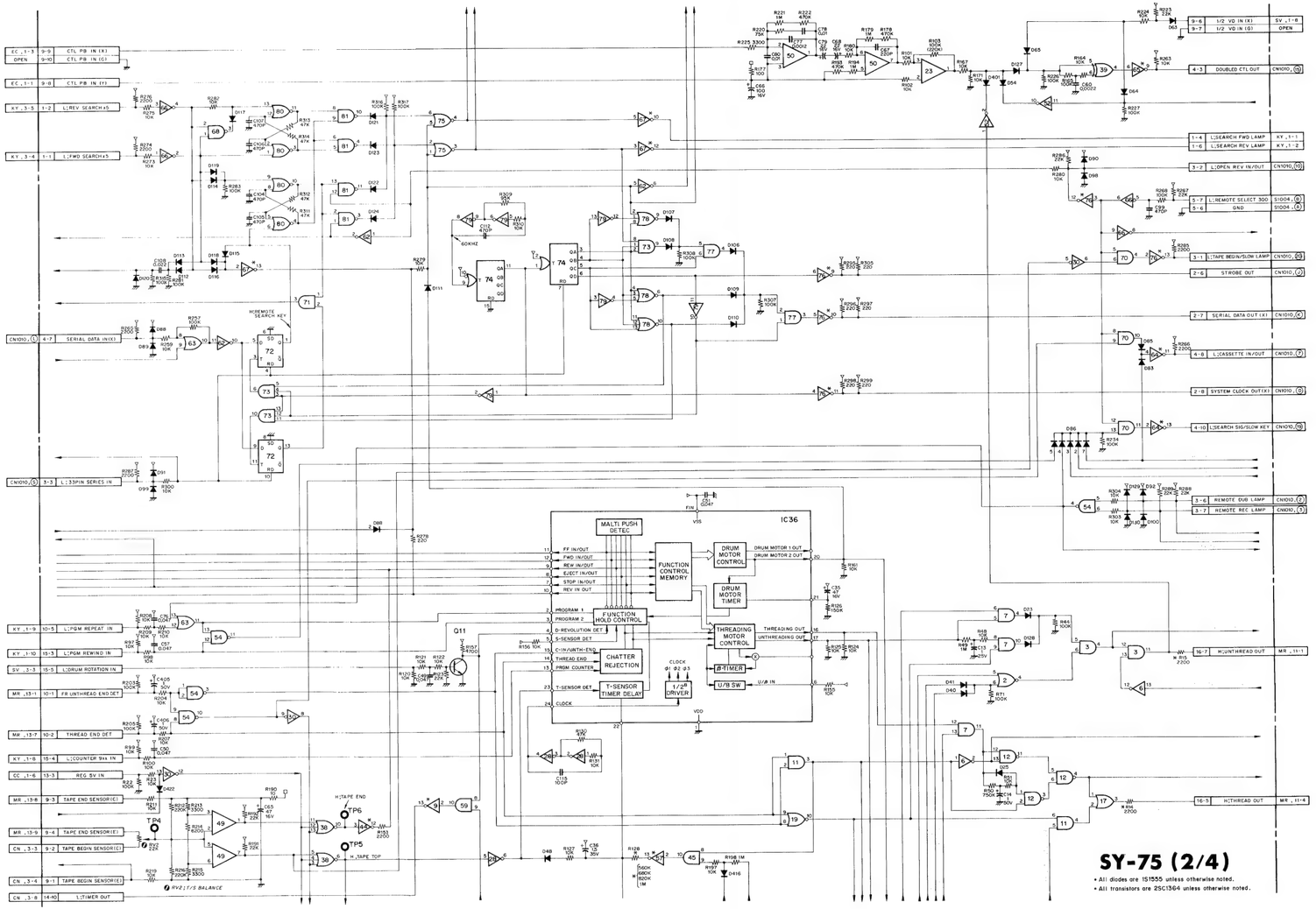


With ( ) are S/N 10951 and later (U/C).

NOTE: The shaded and ⚠ -marked components are critical to safety.
Replace only with same components as specified.

SY-75 (3/4)
(SYSTEM CONTROL)

S/N UP TO 18450 (U/C)

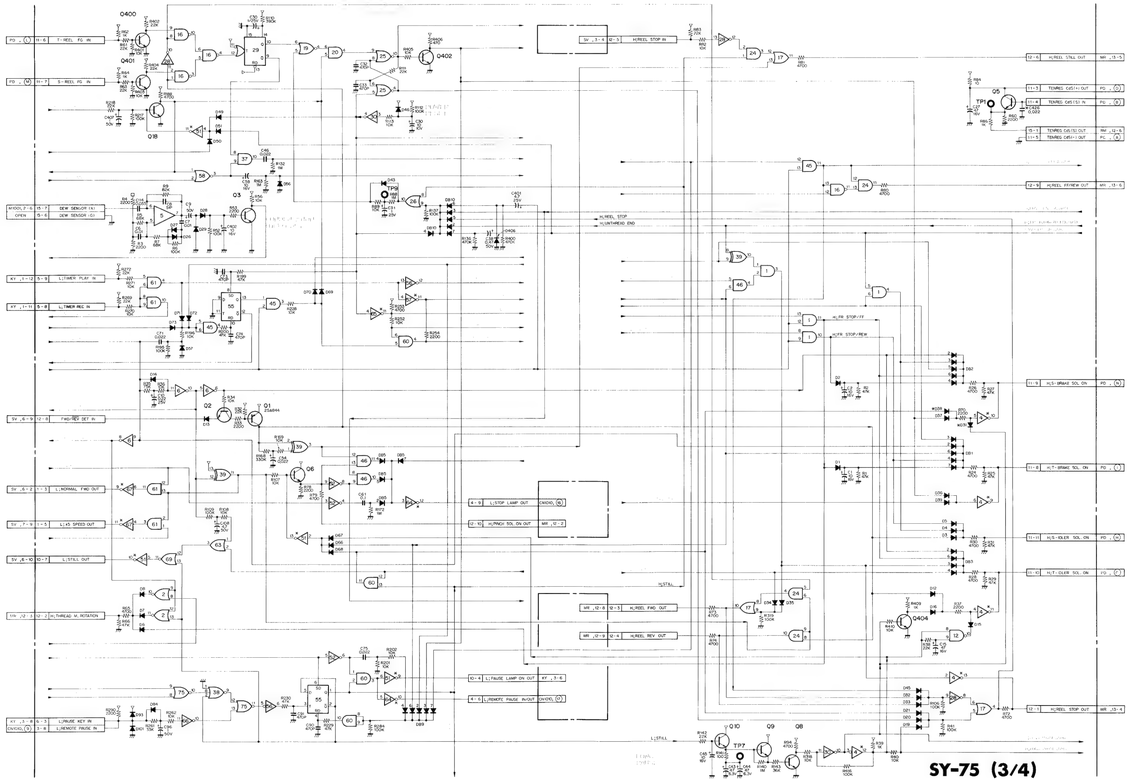

## SY-75 (3/4)

- All diodes are 1S1555 unless otherwise noted.
- All transistors are 2SC1364 unless otherwise noted.







SY-75 (4/4)
(SYSTEM CONTROL)

S/N UP TO 18450 (U/C)

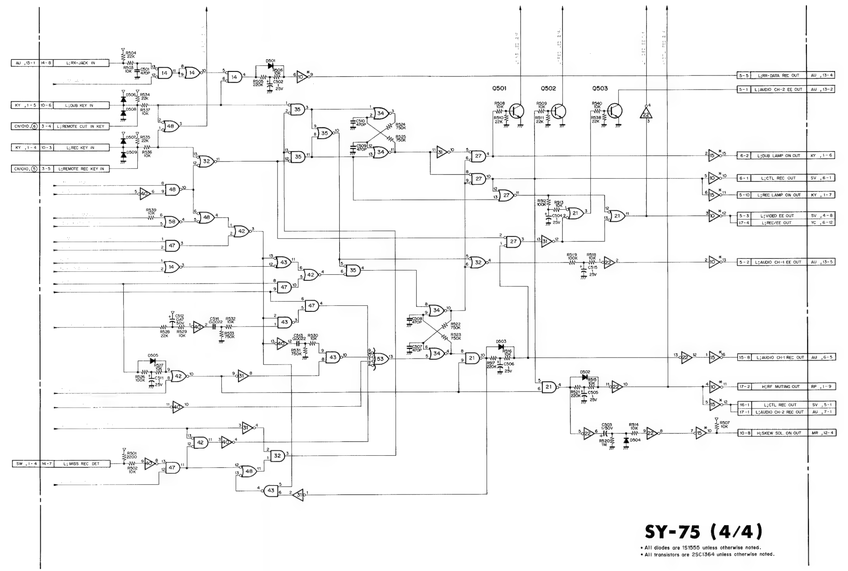

## SY-75 (4/4)

- All diodes are 1S1555 unless otherwise noted.
- All transistors are 2SC1364 unless otherwise noted.

**NOTE:** The shaded and ⚠ marked components are critical to safety.
Replace only with same components as specified.

## SY-75 (SYSTEM CONTROL)

S/N 18451 TO 21850 (U/C)

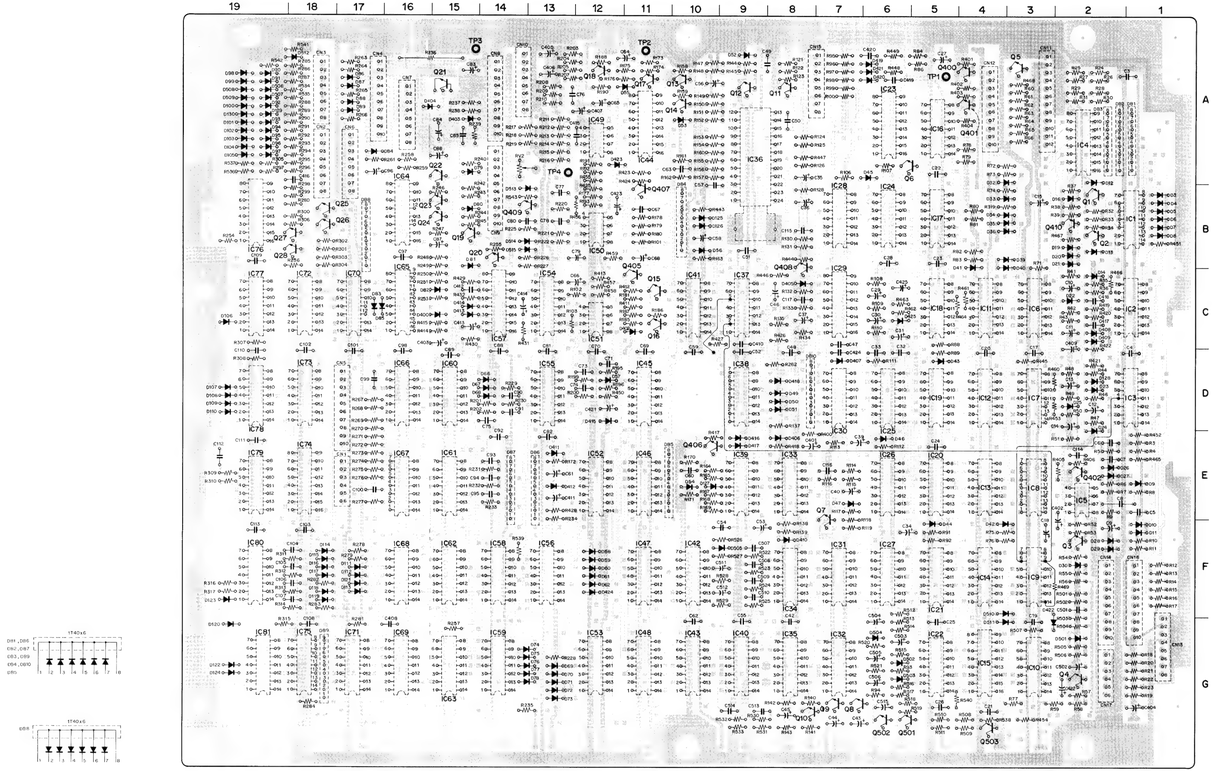

SY-75 – SOLDERING SIDE –



| DN1 | E - 17 | D96 | A - 19 | IC26 | E - 6 |
|---|---|---|---|---|---|
| DN2 | A - 18 | D97 | A - 19 | IC27 | F - 6 |
| DN3 | A - 18 | D98 | A - 19 | IC28 | B - 7 |
| DN4 | A - 17 | D99 | A - 19 | IC29 | C - 7 |
| DN5 | D - 17 | D100 | A - 19 | IC30 | D - 7 |
| DN6 | A - 17 | D101 | A - 19 | IC31 | F - 7 |
| DN7 | A - 16 | D102 | A - 19 | IC32 | G - 7 |
| DN8 | A - 14 | D103 | A - 19 | IC33 | E - 8 |
| DN9 | B - 14 | D104 | A - 19 | IC34 | F - 8 |
| DN10 | A - 14 | D105 | A - 19 | IC35 | G - 8 |
| DN11 | A - 3 | D106 | C - 19 | IC36 | A - 9 |
| DN12 | A - 4 | D107 | D - 19 | IC37 | C - 9 |
| DN13 | G - 1 | D108 | D - 19 | IC38 | D - 9 |
| DN14 | F - 2 | D109 | D - 19 | IC39 | E - 9 |
| DN15 | A - 7 | D110 | D - 19 | IC40 | G - 9 |
| DN16 | F - 1 | D111 | F - 17 | IC41 | C - 10 |
| DN17 | G - 2 | D112 | F - 17 | IC42 | F - 10 |
| | | D113 | F - 17 | IC43 | G - 10 |
| D3 | B - 1 | D114 | F - 18 | IC44 | A - 11 |
| D4 | B - 1 | D115 | F - 18 | IC45 | D - 11 |
| D5 | B - 1 | D116 | F - 18 | IC46 | E - 11 |
| D6 | B - 1 | D117 | F - 18 | IC47 | F - 11 |
| D7 | B - 1 | D118 | F - 18 | IC48 | G - 11 |
| D8 | E - 1 | D119 | F - 18 | IC49 | A - 12 |
| D9 | E - 1 | D120 | G - 19 | IC50 | B - 12 |
| D10 | F - 1 | D121 | F - 19 | IC51 | C - 12 |
| D11 | A - 2 | D122 | F - 19 | IC52 | E - 12 |
| D12 | A - 2 | D123 | F - 19 | IC53 | G - 12 |
| D13 | B - 2 | D124 | E - 19 | IC54 | C - 13 |
| D14 | C - 2 | D125 | B - 10 | IC55 | D - 13 |
| D16 | C - 2 | D126 | B - 10 | IC56 | F - 13 |
| D19 | B - 2 | D127 | E - 10 | IC57 | C - 14 |
| D20 | B - 2 | D128 | D - 2 | IC58 | F - 14 |
| D21 | B - 2 | D129 | A - 19 | IC59 | G - 14 |
| D22 | C - 2 | D130 | A - 19 | IC60 | D - 15 |
| D23 | D - 2 | D400 | C - 15 | IC61 | E - 15 |
| D24 | E - 2 | D402 | C - 11 | IC62 | F - 15 |
| D25 | D - 2 | D403 | A - 15 | IC63 | G - 15 |
| D26 | E - 2 | D404 | A - 16 | IC64 | B - 16 |
| D27 | E - 2 | D405 | C - 8 | IC65 | C - 16 |
| D28 | F - 2 | D406 | E - 8 | IC66 | D - 16 |
| D29 | F - 2 | D407 | D - 7 | IC67 | E - 16 |
| D30 | F - 2 | D408 | C - 2 | IC68 | F - 16 |
| D32 | B - 3 | D409 | C - 2 | IC69 | G - 16 |
| D33 | B - 3 | D410 | F - 8 | IC70 | C - 17 |
| D34 | B - 3 | D411 | E - 13 | IC71 | G - 17 |
| D35 | B - 3 | D412 | E - 13 | IC72 | C - 18 |
| D36 | B - 3 | D413 | C - 15 | IC73 | D - 18 |
| D39 | B - 3 | D414 | C - 15 | IC74 | E - 18 |
| D40 | B - 3 | D415 | D - 12 | IC75 | G - 18 |
| D41 | B - 4 | D416 | E - 9 | IC76 | B - 19 |
| D42 | F - 3 | D417 | E - 9 | IC77 | C - 19 |
| D43 | D - 5 | D418 | D - 8 | IC78 | D - 19 |
| D44 | A - 6 | D419 | A - 6 | IC79 | E - 19 |
| D45 | F - 6 | D420 | A - 6 | IC80 | F - 19 |
| D46 | E - 6 | D421 | A - 6 | IC81 | G - 19 |
| D47 | E - 7 | D422 | G - 2 | | |
| D49 | D - 8 | D423 | A - 12 | Q1 | B - 2 |
| D50 | D - 8 | D424 | F - 12 | Q2 | B - 2 |
| D51 | D - 8 | D425 | C - 6 | Q3 | F - 2 |
| D52 | A - 9 | D501 | G - 2 | Q4 | G - 2 |
| D53 | A - 9 | D502 | G - 5 | Q5 | A - 3 |
| D54 | E - 10 | D503 | G - 6 | Q6 | A - 5 |
| D55 | E - 11 | D504 | G - 6 | Q7 | E - 7 |
| D56 | B - 10 | D505 | F - 10 | Q8 | G - 7 |
| D57 | D - 12 | D506 | A - 19 | Q9 | G - 7 |
| D58 | F - 12 | D507 | A - 19 | Q10 | G - 8 |
| D59 | F - 12 | D508 | A - 19 | Q11 | A - 9 |
| D60 | F - 12 | D509 | A - 19 | Q12 | A - 9 |
| D61 | F - 12 | D510 | F - 3 | Q13 | A - 10 |
| D62 | F - 12 | D511 | G - 3 | Q14 | A - 10 |
| D66 | D - 14 | D512 | A - 18 | Q15 | C - 11 |
| D67 | D - 14 | D513 | B - 13 | Q16 | C - 11 |
| D68 | D - 14 | D514 | B - 13 | Q17 | A - 11 |
| D69 | G - 13 | D515 | B - 13 | Q18 | A - 12 |
| D70 | G - 13 | | | Q19 | B - 15 |
| D71 | G - 13 | IC1 | B - 1 | Q20 | B - 14 |
| D72 | G - 13 | IC2 | C - 1 | Q21 | A - 15 |
| D73 | G - 13 | IC3 | D - 1 | Q22 | A - 15 |
| D74 | G - 13 | IC4 | E - 1 | Q23 | B - 15 |
| D75 | G - 13 | IC5 | E - 2 | Q24 | B - 15 |
| D76 | G - 13 | IC6 | F - 3 | Q25 | B - 18 |
| D77 | G - 13 | IC7 | D - 3 | Q26 | B - 18 |
| D78 | A - 15 | IC8 | E - 3 | Q27 | B - 18 |
| D80 | A - 15 | IC9 | F - 3 | Q28 | B - 18 |
| D81 | B - 15 | IC10 | G - 3 | Q401 | A - 4 |
| D82 | C - 15 | IC11 | C - 4 | Q402 | E - 2 |
| D83 | C - 17 | IC12 | D - 4 | Q405 | C - 11 |
| D84 | A - 17 | IC14 | E - 4 | Q406 | E - 10 |
| D85 | C - 17 | IC15 | G - 4 | Q407 | B - 11 |
| D86 | A - 17 | IC16 | A - 5 | Q408 | B - 8 |
| D87 | A - 17 | IC17 | B - 5 | Q409 | B - 13 |
| D88 | A - 17 | IC18 | C - 5 | Q410 | B - 2 |
| D89 | A - 17 | IC19 | D - 5 | Q501 | G - 5 |
| D90 | A - 19 | IC20 | E - 5 | Q502 | G - 6 |
| D91 | A - 19 | IC21 | F - 5 | Q503 | G - 6 |
| D92 | A - 19 | IC22 | G - 5 | | |
| D93 | A - 19 | IC23 | A - 6 | RV2 | A - 14 |
| D94 | A - 19 | IC24 | B - 6 | | |
| D95 | A - 19 | IC25 | D - 6 | TP1 | A - 5 |
| | | | | TP2 | A - 11 |
| | | | | TP3 | A - 15 |
| | | | | TP4 | A - 13 |

| REF. NO. | TYPE | 12V PIN | 5V PIN | GND PIN |
|---|---|---|---|---|
| IC1 | TC4081BP | | 14 | 7 |
| IC2 | TC4001BP | | 14 | 7 |
| IC3 | TC4081BP | | 14 | 7 |
| IC4 | TD62302P | | 9 | 8 |
| IC5 | μPC4558C | 8 | | 4 |
| IC6 | TC4069UBP | | 14 | 7 |
| IC7 | TC4081BP | | 14 | 7 |
| IC8 | TC4001BP | | 14 | 7 |
| IC9 | MIS4529P | | 14 | 7 |
| IC10 | MIS4529P | | 14 | 7 |
| IC11 | TC4081BP | | 14 | 7 |
| IC12 | TC4081BP | | 14 | 7 |
| IC13 | TC4071BP | | 14 | 7 |
| IC14 | TC4001BP | | 14 | 7 |
| IC15 | MIS4538P | — | — | — |
| IC16 | TC4011BP | | 14 | 7 |
| IC17 | TC4071BP | | 14 | 7 |
| IC18 | TC4073BP | | 14 | 7 |
| IC19 | TC4001BP | | 14 | 7 |
| IC20 | TC4081BP | | 14 | 7 |
| IC21 | TC4081BP | | 14 | 7 |
| IC22 | TC4069UBP | | 14 | 7 |
| IC23 | μPC4558C | 8 | | 4 |
| IC24 | TC4081BP | | 14 | 7 |
| IC25 | TC4001BP | | 14 | 7 |
| IC26 | TC4071BP | | 14 | 7 |
| IC27 | TC4001BP | | 14 | 7 |
| IC28 | TC4069UBP | | 14 | 7 |
| IC29 | HD14538BP | | 16 | 8 |
| IC30 | MC14544BCP | | 14 | 7 |
| IC31 | TC4069UBP | | 14 | 7 |
| IC32 | TC4081BP | | 14 | 7 |
| IC33 | TC4075BP | | 14 | 7 |
| IC34 | TC4001BP | | 14 | 7 |
| IC35 | TC4001BP | | 14 | 7 |
| IC36 | CX757 | — | — | — |
| IC37 | TC4081BP | | 14 | 7 |
| IC38 | TC4025BP | | 14 | 7 |
| IC39 | TC4030BP | | 14 | 7 |
| IC40 | MC14584BCP | | 14 | 7 |
| IC41 | TC4073BP | | 14 | 7 |
| IC42 | TC4001BP | | 14 | 7 |
| IC43 | TC4001BP | | 14 | 7 |
| IC44 | TD62302P | | 9 | 8 |
| IC45 | TC4081BP | | 14 | 7 |
| IC46 | TC4001BP | | 14 | 7 |
| IC47 | TC4081BP | | 14 | 7 |
| IC48 | TC4011BP | | 14 | 7 |
| IC49 | NJM2903D | — | — | 4 |
| IC50 | NJM4558D | 8 | | 4 |
| IC51 | μPC4558C | 8 | | 4 |
| IC52 | TC4069UBP | | 14 | 7 |
| IC53 | TC4012BP | | 14 | 7 |
| IC54 | TC4001BP | | 14 | 7 |
| IC55 | TC4013BP | | 14 | 7 |
| IC56 | TC4069UBP | | 14 | 7 |
| IC57 | MC14538BCP | | 14 | 7 |
| IC58 | TC4001BP | | 14 | 7 |
| IC59 | TC4081BP | | 14 | 7 |
| IC60 | TC4081BP | | 14 | 7 |
| IC61 | TC4081BP | | 14 | 7 |
| IC62 | TC4069UBP | | 14 | 7 |
| IC63 | TC4071BP | | 14 | 7 |
| IC64 | TD62302P | | 9 | 8 |
| IC65 | TD62302P | | 9 | 8 |
| IC66 | TC4069UBP | | 14 | 7 |
| IC67 | MIS4529P | | 14 | 7 |
| IC68 | TC4011BP | | 14 | 7 |
| IC69 | TC4001BP | | 14 | 7 |
| IC70 | TC4081BP | | 14 | 7 |
| IC71 | TC4081BP | | 14 | 7 |
| IC72 | TC4073BP | | 14 | 7 |
| IC73 | TC4073BP | | 14 | 7 |
| IC74 | TC4520BP | | 16 | 8 |
| IC75 | TC4001BP | | 14 | 7 |
| IC76 | TD62302P | | 9 | 8 |
| IC77 | TC4081BP | | 14 | 7 |
| IC78 | TC4025BP | | 14 | 7 |
| IC79 | TC4069UBP | | 14 | 7 |
| IC80 | TC4001BP | | 14 | 7 |
| IC81 | TC4081BP | | 14 | 7 |

## SY-75 (SYSTEM CONTROL)

S/N 21851 TO 34950 (U/C)

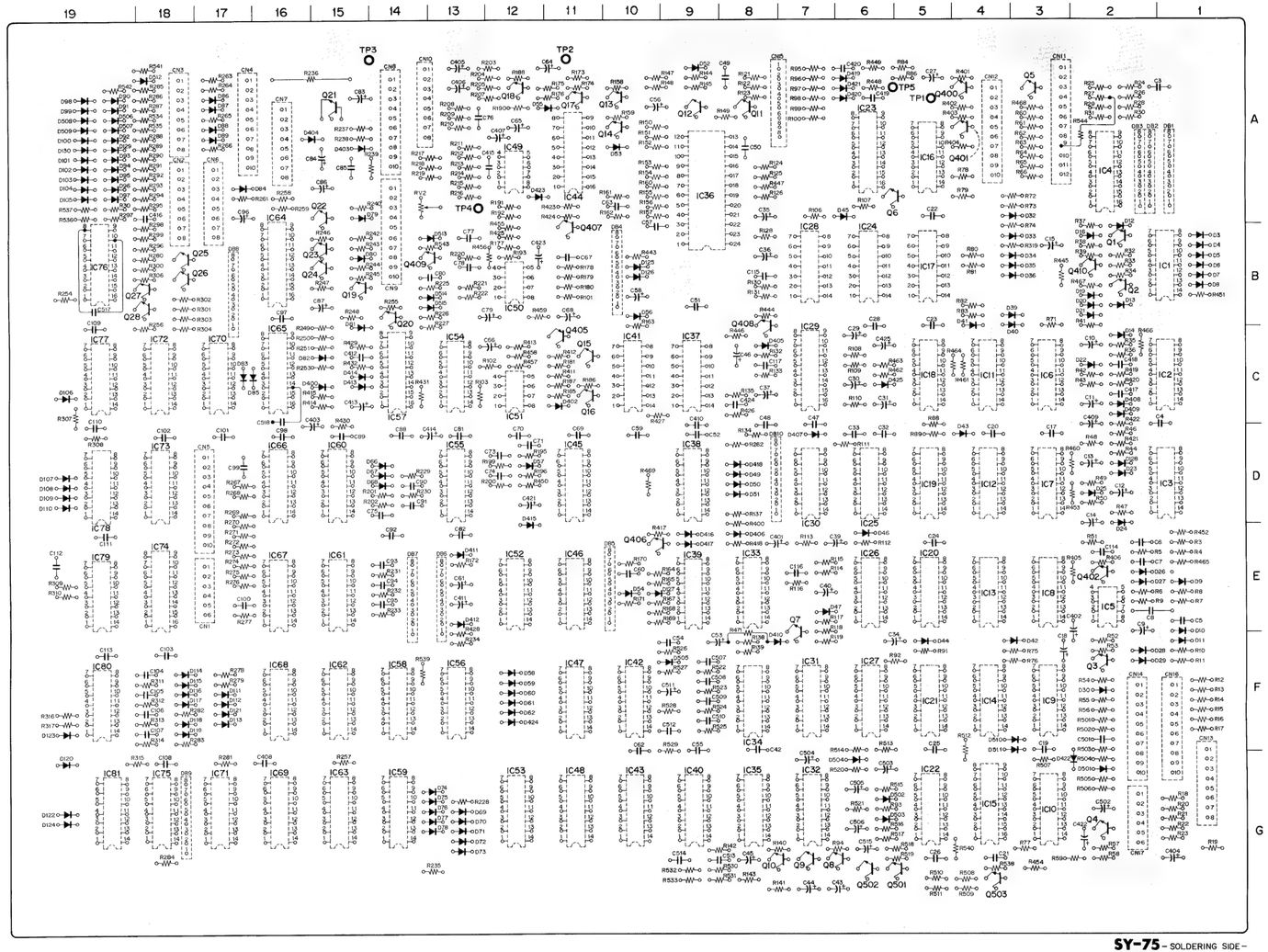

**SY-75** – SOLDERING SIDE –
t-606-368-15
VO-5600
VO-5630

ADDED '83. 9

| | | | | | | | | | | | |
|---|---|---|---|---|---|---|---|---|---|---|---|
| CN1 | E-17 | D75 | G-13 | D425 | C-6 | IC53 | G-12 | | | | |
| CN2 | A-18 | D76 | G-13 | D501 | G-2 | IC54 | C-13 | | | | |
| CN3 | A-18 | D77 | G-13 | D502 | G-6 | IC55 | D-13 | | | | |
| CN4 | A-17 | D78 | G-13 | D503 | G-6 | IC56 | F-13 | | | | |
| CN5 | D-17 | D79 | A-15 | D504 | G-6 | IC57 | C-14 | | | | |
| CN6 | A-17 | D80 | B-15 | D505 | F-9 | IC58 | F-14 | | | | |
| CN7 | A-16 | D81 | B-15 | D506 | A-19 | IC59 | G-14 | | | | |
| CN8 | A-14 | D82 | C-15 | D507 | A-19 | IC60 | D-15 | | | | |
| CN9 | B-14 | D83 | C-17 | D508 | A-19 | IC61 | E-15 | | | | |
| CN10 | A-14 | D84 | A-17 | D509 | A-19 | IC62 | F-15 | | | | |
| CN11 | A-3 | D85 | C-17 | D510 | F-4 | IC63 | G-15 | | | | |
| CN12 | A-4 | D86 | A-17 | D511 | F-4 | IC64 | B-16 | | | | |
| CN13 | G-1 | D87 | A-17 | D512 | A-18 | IC65 | C-16 | | | | |
| CN14 | F-2 | D88 | A-17 | D513 | B-13 | IC66 | D-16 | | | | |
| CN15 | A-8 | D89 | A-17 | D514 | B-13 | IC67 | E-16 | | | | |
| CN16 | F-1 | D90 | A-19 | D515 | B-13 | IC68 | F-16 | | | | |
| CN17 | G-2 | D91 | A-19 | | | IC69 | G-16 | | | | |
| | | D92 | A-19 | D81 | A-1 | IC70 | C-17 | | | | |
| D3 | B-1 | D93 | A-19 | D82 | A-2 | IC71 | G-17 | | | | |
| D4 | B-1 | D94 | A-19 | D83 | A-2 | IC72 | C-18 | | | | |
| D5 | B-1 | D95 | A-19 | D84 | B-10 | IC73 | D-18 | | | | |
| D6 | B-1 | D96 | A-19 | D85 | E-10 | IC74 | E-18 | | | | |
| D7 | B-7 | D97 | A-19 | D86 | E-13 | IC75 | G-18 | | | | |
| D8 | B-7 | D98 | A-19 | D87 | E-14 | IC76 | B-19 | | | | |
| D9 | E-1 | D99 | A-19 | D88 | B-17 | IC77 | C-19 | | | | |
| D10 | E-1 | D100 | A-19 | D89 | G-18 | IC78 | D-19 | | | | |
| D11 | F-1 | D101 | A-19 | D810 | D-8 | IC79 | E-19 | | | | |
| D12 | B-2 | D102 | A-19 | | | IC80 | F-19 | | | | |
| D13 | B-2 | D103 | A-19 | IC1 | B-1 | IC81 | G-19 | | | | |
| D14 | C-2 | D104 | A-19 | IC2 | C-1 | | | | | | |
| D16 | B-2 | D105 | A-19 | IC3 | D-1 | Q1 | B-2 | | | | |
| D19 | B-2 | D106 | C-19 | IC4 | A-2 | Q2 | B-2 | | | | |
| D20 | B-2 | D107 | D-19 | IC5 | E-2 | Q3 | F-2 | | | | |
| D21 | B-2 | D108 | D-19 | IC6 | C-3 | Q4 | G-2 | | | | |
| D22 | C-2 | D109 | D-19 | IC7 | D-3 | Q5 | A-3 | | | | |
| D23 | D-2 | D110 | D-19 | IC8 | E-3 | Q6 | A-6 | | | | |
| D24 | E-2 | D111 | F-17 | IC9 | F-3 | Q7 | E-7 | | | | |
| D25 | D-2 | D112 | F-17 | IC10 | G-3 | Q8 | G-7 | | | | |
| D26 | E-2 | D113 | F-17 | IC11 | C-4 | Q9 | G-7 | | | | |
| D27 | E-2 | D114 | F-18 | IC12 | D-4 | Q10 | G-8 | | | | |
| D28 | F-2 | D115 | F-18 | IC13 | E-4 | Q11 | A-8 | | | | |
| D29 | F-2 | D116 | F-18 | IC14 | F-4 | Q12 | A-9 | | | | |
| D30 | F-2 | D117 | F-18 | IC15 | G-4 | Q13 | A-10 | | | | |
| D32 | A-4 | D118 | F-18 | IC16 | A-5 | Q14 | A-10 | | | | |
| D33 | B-4 | D119 | F-18 | IC17 | B-5 | Q15 | C-11 | | | | |
| D34 | B-4 | D120 | G-19 | IC18 | C-5 | Q16 | C-11 | | | | |
| D35 | B-4 | D121 | F-17 | IC19 | D-5 | Q17 | A-11 | | | | |
| D36 | B-4 | D122 | G-19 | IC20 | E-5 | Q18 | A-12 | | | | |
| D39 | B-4 | D123 | F-19 | IC21 | F-5 | Q19 | B-15 | | | | |
| D40 | B-4 | D124 | G-19 | IC22 | G-5 | Q20 | B-14 | | | | |
| D41 | B-4 | D125 | B-10 | IC23 | A-6 | Q21 | A-15 | | | | |
| D42 | A-4 | D126 | B-10 | IC24 | B-6 | Q22 | A-15 | | | | |
| D43 | D-4 | D127 | E-10 | IC25 | D-6 | Q23 | B-15 | | | | |
| D44 | F-5 | D128 | D-2 | IC26 | E-6 | Q24 | B-15 | | | | |
| D45 | A-6 | D129 | A-19 | IC27 | F-6 | Q25 | B-18 | | | | |
| D46 | E-6 | D130 | A-19 | IC28 | B-7 | Q26 | B-18 | | | | |
| D47 | D-7 | D400 | C-15 | IC29 | C-7 | Q27 | B-18 | | | | |
| D49 | D-8 | D401 | C-11 | IC30 | D-7 | Q28 | B-18 | | | | |
| D50 | D-8 | D403 | A-15 | IC31 | F-7 | Q400 | A-4 | | | | |
| D51 | D-8 | D404 | A-15 | IC32 | G-7 | Q401 | A-4 | | | | |
| D52 | A-9 | D405 | C-8 | IC33 | E-8 | Q402 | E-2 | | | | |
| D53 | A-10 | D406 | E-8 | IC34 | F-8 | Q405 | C-11 | | | | |
| D54 | E-10 | D407 | D-7 | IC35 | G-8 | Q406 | E-10 | | | | |
| D55 | A-11 | D408 | C-2 | IC36 | A-9 | Q407 | B-11 | | | | |
| D56 | B-10 | D409 | C-2 | IC37 | C-9 | Q408 | C-8 | | | | |
| D57 | D-12 | D410 | B-8 | IC38 | D-9 | Q409 | B-14 | | | | |
| D58 | F-12 | D411 | E-13 | IC39 | E-9 | Q410 | B-2 | | | | |
| D59 | F-12 | D412 | E-13 | IC40 | G-9 | Q501 | G-6 | | | | |
| D60 | F-12 | D413 | C-15 | IC41 | C-10 | Q502 | G-6 | | | | |
| D61 | F-12 | D414 | C-15 | IC42 | F-10 | Q503 | G-4 | | | | |
| D62 | F-12 | D415 | E-12 | IC43 | G-10 | | | | | | |
| D66 | D-14 | D416 | E-9 | IC44 | A-11 | RV2 | A-14 | | | | |
| D67 | D-14 | D417 | E-9 | IC45 | D-11 | | | | | | |
| D68 | D-14 | D418 | D-8 | IC46 | E-11 | TP1 | A-5 | | | | |
| D69 | G-13 | D419 | A-6 | IC47 | F-11 | TP2 | A-11 | | | | |
| D70 | G-13 | D420 | A-6 | IC48 | G-11 | TP3 | A-15 | | | | |
| D71 | G-13 | D421 | A-6 | IC49 | A-12 | TP4 | A-13 | | | | |
| D72 | G-13 | D422 | G-3 | IC50 | B-12 | TP5 | A-6 | | | | |
| D73 | G-13 | D423 | A-12 | IC51 | C-12 | | | | | | |
| D74 | G-13 | D424 | F-12 | IC52 | E-12 | | | | | | |

| REF. NO. | TYPE | 12V PIN | 5V PIN | GND PIN |
|---|---|---|---|---|
| IC1 | TC4081BP | | 14 | 7 |
| IC2 | TC4001BP | | 14 | 7 |
| IC3 | TC4081BP | | 14 | 7 |
| IC4 | TD62302P | | 9 | 8 |
| IC5 | μPC4558C | 8 | | 4 |
| IC6 | TC4069UBP | | 14 | 7 |
| IC7 | TC4081BP | | 14 | 7 |
| IC8 | TC4001BP | | 14 | 7 |
| IC9 | M54529P | | 14 | 7 |
| IC10 | M54529P | | 14 | 7 |
| IC11 | TC4081BP | | 14 | 7 |
| IC12 | TC4011BP | | 14 | 7 |
| IC13 | TC4071BP | | 14 | 7 |
| IC14 | TC4001BP | | 14 | 7 |
| IC15 | M54519P | | | |
| IC16 | TC4011BP | | 14 | 7 |
| IC17 | TC4071BP | | 14 | 7 |
| IC18 | TC4073BP | | 14 | 7 |
| IC19 | TC4001BP | | 14 | 7 |
| IC20 | TC4081BP | | 14 | 7 |
| IC21 | TC4011BP | | 14 | 7 |
| IC22 | TC4069UBP | | 14 | 7 |
| IC23 | TC4020BP | 8 | 16 | 8 |
| IC24 | TC4081BP | | 14 | 7 |
| IC25 | TC4001BP | | 14 | 7 |
| IC26 | TC4071BP | | 14 | 7 |
| IC27 | TC4001BP | | 14 | 7 |
| IC28 | TC4069UBP | | 14 | 7 |
| IC29 | HD14538BP | | 16 | 8 |
| IC30 | MC14584BCP | | 14 | 7 |
| IC31 | TC4069UBP | | 14 | 7 |
| IC32 | TC4081BP | | 14 | 7 |
| IC33 | TC4075BP | | 14 | 7 |
| IC34 | TC4001BP | | 14 | 7 |
| IC35 | TC4001BP | | 14 | 7 |
| IC36 | CX757 | | | |
| IC37 | TC4081BP | | 14 | 7 |
| IC38 | TC4025BP | | 14 | 7 |
| IC39 | TC4030BP | | 14 | 7 |
| IC40 | TC4069UBP | | 14 | 7 |
| IC41 | TC4073BP | | 14 | 7 |
| IC42 | TC4001BP | | 14 | 7 |
| IC43 | TC4011BP | | 14 | 7 |
| IC44 | TD62302P | | 9 | 8 |
| IC45 | TC4081BP | | 14 | 7 |
| IC46 | TC4081BP | | 14 | 7 |
| IC47 | TC4081BP | | 14 | 7 |
| IC48 | TC4011BP | | 14 | 7 |
| IC49 | NJM2903D | | | 4 |
| IC50 | NJM4558D-D | 8 | | 4 |
| IC51 | μPC4558C | 8 | | 4 |
| IC52 | TC4069UBP | | 14 | 7 |
| IC53 | TC4012BP | | 14 | 7 |
| IC54 | TC4011BP | | 14 | 7 |
| IC55 | TC4013BP | | 14 | 7 |
| IC56 | TC4069UBP | | 14 | 7 |
| IC57 | HD14538BP | | 16 | 8 |
| IC58 | TC4001BP | | 14 | 7 |
| IC59 | TC4081BP | | 14 | 7 |
| IC60 | TC4081BP | | 14 | 7 |
| IC61 | TC4081BP | | 14 | 7 |
| IC62 | TC4069UBP | | 14 | 7 |
| IC63 | TC4071BP | | 14 | 7 |
| IC64 | TD62302P | | 9 | 8 |
| IC65 | TD62302P | | 9 | 8 |
| IC66 | TC4069UBP | | 14 | 7 |
| IC67 | M54529P | | 14 | 7 |
| IC68 | TC4011BP | | 14 | 7 |
| IC69 | TC4001BP | | 14 | 7 |
| IC70 | TC4081BP | | 14 | 7 |
| IC71 | TC4081BP | | 14 | 7 |
| IC72 | TC4013BP | | 14 | 7 |
| IC73 | TC4073BP | | 14 | 7 |
| IC74 | TC4520BP | | 16 | 8 |
| IC75 | TC4001BP | | 14 | 7 |
| IC76 | TD62302P | | 9 | 8 |
| IC77 | TC4081BP | | 14 | 7 |
| IC78 | TC4025BP | | 14 | 7 |
| IC79 | TC4069UBP | | 14 | 7 |
| IC80 | TC4001BP | | 14 | 7 |
| IC81 | TC4081BP | | 14 | 7 |

SY-75 SY-75

## SY-75 (SYSTEM CONTROL)

S/N 34951 AND LATER (U/C)

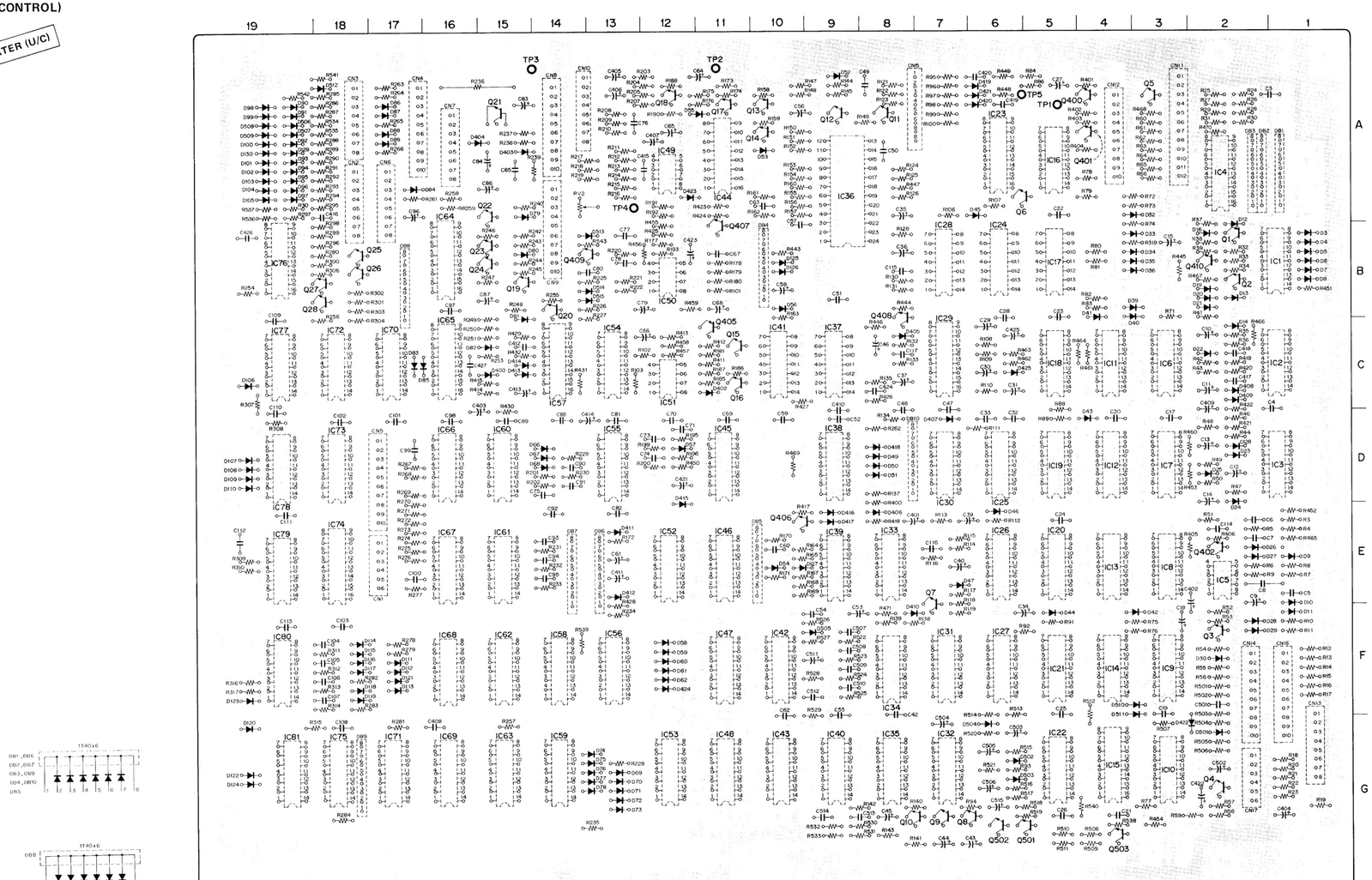



**SY-75** – SOLDERING SIDE –
I-606-368-18
VO-5600
VO-5630

| | | | | | | | | | | | |
|---|---|---|---|---|---|---|---|---|---|---|---|
| CN1 | E-17 | D75 | G-13 | D425 | C-6 | D501 | G-2 | D502 | G-6 | D503 | G-6 |
| CN2 | A-18 | D76 | G-13 | D504 | G-6 | D505 | F-9 | D506 | A-19 | D507 | A-19 |
| CN3 | A-18 | D77 | G-13 | D508 | A-19 | D509 | A-19 | D510 | F-4 | D511 | F-4 |
| CN4 | A-17 | D78 | G-13 | D512 | A-18 | D513 | B-13 | D514 | B-13 | D515 | B-13 |
| CN5 | D-17 | D79 | A-15 | | | | | | | | |
| CN6 | A-17 | D80 | B-15 | DB1 | A-1 | DB2 | A-2 | DB3 | A-2 | DB4 | B-10 |
| CN7 | A-16 | D81 | B-15 | DB5 | E-10 | DB6 | E-13 | DB7 | E-14 | DB8 | B-17 |
| CN8 | A-14 | D82 | C-15 | DB9 | G-18 | DB10 | D-8 | | | | |
| CN9 | B-14 | D83 | C-17 | | | | | | | | |
| CN10 | A-14 | D84 | A-17 | IC1 | B-1 | IC2 | C-1 | IC3 | D-1 | IC4 | A-2 |
| CN11 | A-3 | D85 | C-17 | IC5 | E-2 | IC6 | C-3 | IC7 | D-3 | IC8 | E-3 |
| CN12 | A-4 | D86 | A-17 | IC9 | F-3 | IC10 | G-3 | IC11 | C-4 | IC12 | D-4 |
| CN13 | G-1 | D87 | A-17 | IC13 | E-4 | IC14 | F-4 | IC15 | G-4 | IC16 | A-5 |
| CN14 | F-2 | D88 | A-17 | IC17 | B-5 | IC18 | C-5 | IC19 | D-5 | IC20 | E-5 |
| CN15 | A-8 | D89 | A-17 | IC21 | F-5 | IC22 | G-5 | IC23 | A-6 | IC24 | A-6 |
| CN16 | F-1 | D90 | A-19 | IC25 | D-6 | IC26 | E-6 | IC27 | F-6 | IC28 | B-7 |
| CN17 | G-2 | D91 | A-19 | IC29 | C-7 | IC30 | D-7 | IC31 | F-7 | IC32 | G-7 |
| | | D92 | A-19 | IC33 | E-8 | IC34 | F-8 | IC35 | G-8 | IC36 | A-8 |
| D3 | B-1 | D93 | A-19 | IC37 | B-9 | IC38 | C-9 | IC39 | D-9 | IC40 | G-9 |
| D4 | B-1 | D94 | A-19 | IC41 | E-10 | IC42 | F-10 | IC43 | G-10 | IC44 | A-11 |
| D5 | B-1 | D95 | A-19 | IC45 | A-11 | IC46 | C-11 | IC47 | F-11 | IC48 | G-11 |
| D6 | B-1 | D96 | A-19 | IC49 | B-12 | IC50 | B-12 | IC51 | C-12 | IC52 | E-12 |
| D7 | B-7 | D97 | A-19 | IC53 | G-12 | IC54 | C-13 | IC55 | D-13 | IC56 | F-13 |
| D8 | B-7 | D98 | A-19 | IC57 | C-14 | IC58 | F-14 | IC59 | G-14 | IC60 | D-15 |
| D9 | E-1 | D99 | A-19 | IC61 | E-15 | IC62 | F-15 | IC63 | G-15 | IC64 | B-16 |
| D10 | E-1 | D100 | A-19 | IC65 | C-16 | IC66 | D-16 | IC67 | E-16 | IC68 | F-16 |
| D11 | F-1 | D101 | A-19 | IC69 | G-16 | IC70 | C-17 | IC71 | G-17 | IC72 | C-18 |
| D12 | B-2 | D102 | A-19 | IC73 | A-8 | IC74 | E-18 | IC75 | G-18 | IC76 | B-19 |
| D13 | B-2 | D103 | A-19 | IC77 | C-19 | IC78 | D-19 | IC79 | E-19 | IC80 | F-19 |
| D14 | C-2 | D104 | A-19 | IC81 | G-19 | | | | | | |
| D15 | B-2 | D105 | A-19 | | | | | | | | |
| D16 | B-2 | D106 | C-19 | Q1 | B-2 | Q2 | B-2 | Q3 | F-2 | Q4 | G-2 |
| D19 | B-2 | D107 | D-19 | Q5 | A-3 | Q6 | A-6 | Q7 | E-7 | Q8 | G-7 |
| D20 | B-2 | D108 | D-19 | Q9 | G-7 | Q10 | G-8 | Q11 | A-8 | Q12 | A-9 |
| D21 | B-2 | D109 | D-19 | Q13 | A-10 | Q14 | A-10 | Q15 | C-11 | Q16 | C-11 |
| D22 | C-2 | D110 | D-19 | Q17 | A-11 | Q18 | A-12 | Q19 | B-15 | Q20 | B-14 |
| D23 | D-2 | D111 | F-17 | Q21 | A-15 | Q22 | A-15 | Q23 | B-15 | Q24 | B-15 |
| D24 | E-2 | D112 | F-17 | Q25 | A-18 | Q26 | B-18 | Q27 | B-18 | Q28 | B-18 |
| D25 | D-2 | D113 | F-17 | Q400 | A-4 | Q401 | A-4 | Q402 | E-2 | Q405 | C-11 |
| D26 | E-2 | D114 | F-18 | Q406 | E-10 | Q407 | B-11 | Q408 | C-8 | Q409 | B-14 |
| D27 | E-2 | D115 | F-18 | Q410 | B-2 | Q411 | E-13 | Q412 | E-13 | Q413 | C-15 |
| D28 | F-2 | D116 | F-18 | Q414 | C-15 | Q415 | E-12 | Q416 | E-9 | Q417 | E-9 |
| D29 | F-2 | D117 | F-18 | Q418 | D-8 | Q419 | A-6 | Q420 | A-6 | Q421 | A-6 |
| D30 | F-2 | D118 | F-18 | Q422 | G-3 | Q423 | A-12 | Q424 | F-12 | | |
| D33 | B-4 | D119 | F-18 | | | | | | | | |
| D34 | B-4 | D120 | G-19 | RV2 | A-14 | | | | | | |
| D35 | B-4 | D121 | F-17 | | | | | | | | |
| D36 | B-4 | D122 | G-19 | TP1 | A-5 | TP2 | A-11 | TP3 | A-15 | TP4 | A-13 |
| D39 | B-4 | D123 | F-19 | TP5 | A-6 | | | | | | |
| D40 | B-4 | D124 | G-19 | | | | | | | | |
| D41 | B-4 | D125 | B-10 | | | | | | | | |
| D42 | F-4 | D126 | B-10 | | | | | | | | |
| D43 | D-4 | D127 | E-10 | | | | | | | | |
| D44 | F-5 | D128 | D-2 | | | | | | | | |
| D45 | A-6 | D129 | A-19 | | | | | | | | |
| D46 | E-6 | D130 | A-19 | | | | | | | | |
| D47 | D-7 | D400 | C-15 | | | | | | | | |
| D49 | D-8 | D402 | C-11 | | | | | | | | |
| D50 | D-8 | D403 | A-15 | | | | | | | | |
| D51 | D-8 | D404 | A-15 | | | | | | | | |
| D52 | A-9 | D405 | C-8 | | | | | | | | |
| D53 | A-10 | D406 | E-8 | | | | | | | | |
| D54 | E-10 | D407 | D-7 | | | | | | | | |
| D55 | A-11 | D408 | C-2 | | | | | | | | |
| D56 | B-10 | D409 | C-2 | | | | | | | | |
| D57 | D-12 | D410 | F-8 | | | | | | | | |
| D58 | F-12 | D411 | E-13 | | | | | | | | |
| D59 | F-12 | D412 | E-13 | | | | | | | | |
| D60 | F-12 | D413 | C-15 | | | | | | | | |
| D61 | F-12 | D414 | C-15 | | | | | | | | |
| D62 | F-12 | D415 | E-12 | | | | | | | | |
| D66 | D-14 | D416 | E-9 | | | | | | | | |
| D67 | D-14 | D417 | E-9 | | | | | | | | |
| D68 | D-14 | D418 | D-8 | | | | | | | | |
| D69 | G-13 | D419 | A-6 | | | | | | | | |
| D70 | G-13 | D420 | A-6 | | | | | | | | |
| D71 | G-13 | D421 | A-6 | | | | | | | | |
| D72 | G-13 | D422 | G-3 | | | | | | | | |
| D73 | G-13 | D423 | A-12 | | | | | | | | |
| D74 | G-13 | D424 | F-12 | | | | | | | | |

| REF. NO. | TYPE | 12V PIN | 5V PIN | GND PIN |
|---|---|---|---|---|
| IC1 | TC4081BP | | 14 | 7 |
| IC2 | TC4001BP | | 14 | 7 |
| IC3 | TC4081BP | | 14 | 7 |
| IC4 | TD62302P | | 9 | 8 |
| IC5 | μPC4558C | 8 | | 4 |
| IC6 | TC4069UBP | | 14 | 7 |
| IC7 | TC4081BP | | 14 | 7 |
| IC8 | TC4001BP | | 14 | 7 |
| IC9 | M54529P | | 14 | 7 |
| IC10 | M54529P | | 14 | 7 |
| IC11 | TC4081BP | | 14 | 7 |
| IC12 | TC4001BP | | 14 | 7 |
| IC13 | TC4071BP | | 14 | 7 |
| IC14 | TC4001BP | | 14 | 7 |
| IC15 | M54519P | | — | — |
| IC16 | TC4011BP | | 14 | 7 |
| IC17 | TC4071BP | | 14 | 7 |
| IC18 | TC4073BP | | 14 | 7 |
| IC19 | TC4001BP | | 14 | 7 |
| IC20 | TC4081BP | | 14 | 7 |
| IC21 | TC4011BP | | 14 | 7 |
| IC22 | TC4069UBP | | 14 | 7 |
| IC23 | TC4020BP | 8 | 16 | 8 |
| IC24 | TC4081BP | | 14 | 7 |
| IC25 | TC4001BP | | 14 | 7 |
| IC26 | TC4071BP | | 14 | 7 |
| IC27 | TC4001BP | | 14 | 7 |
| IC28 | TC4069UBP | | 14 | 7 |
| IC29 | HD14538BP | | 16 | 8 |
| IC30 | MC14584BCP | | 14 | 7 |
| IC31 | TC4069UBP | | 14 | 7 |
| IC32 | TC4081BP | | 14 | 7 |
| IC33 | TC4075BP | | 14 | 7 |
| IC34 | TC4001BP | | 14 | 7 |
| IC35 | TC4001BP | | 14 | 7 |
| IC36 | CX757 | | — | — |
| IC37 | TC4081BP | | 14 | 7 |
| IC38 | TC4025BP | | 14 | 7 |
| IC39 | TC4030BP | | 14 | 7 |
| IC40 | TC4069UBP | | 14 | 7 |
| IC41 | TC4073BP | | 14 | 7 |
| IC42 | TC4001BP | | 14 | 7 |
| IC43 | TC4011BP | | 14 | 7 |
| IC44 | TD62302P | | 9 | 8 |
| IC45 | TC4081BP | | 14 | 7 |
| IC46 | TC4081BP | | 14 | 7 |
| IC47 | TC4081BP | | 14 | 7 |
| IC48 | TC4081BP | | 14 | 7 |
| IC49 | NJM2903D | | — | 4 |
| IC50 | NJM4558D-D | 8 | | 4 |
| IC51 | μPC4558C | 8 | | 4 |
| IC52 | TC4069UBP | | 14 | 7 |
| IC53 | TC4012BP | | 14 | 7 |
| IC54 | TC4011BP | | 14 | 7 |
| IC55 | TC4013BP | | 14 | 7 |
| IC56 | TC4069UBP | | 14 | 7 |
| IC57 | HD14538BP | | 16 | 8 |
| IC58 | TC4001BP | | 14 | 7 |
| IC59 | TC4081BP | | 14 | 7 |
| IC60 | TC4081BP | | 14 | 7 |
| IC61 | TC4081BP | | 14 | 7 |
| IC62 | TC4069UBP | | 14 | 7 |
| IC63 | TC4071BP | | 14 | 7 |
| IC64 | TD62302P | | 9 | 8 |
| IC65 | TD62302P | | 9 | 8 |
| IC66 | TC4069UBP | | 14 | 7 |
| IC67 | M54529P | | 14 | 7 |
| IC68 | TC4011BP | | 14 | 7 |
| IC69 | TC4001BP | | 14 | 7 |
| IC70 | TC4081BP | | 14 | 7 |
| IC71 | TC4081BP | | 14 | 7 |
| IC72 | TC4013BP | | 14 | 7 |
| IC73 | TC4073BP | | 14 | 7 |
| IC74 | TC4520BP | | 16 | 8 |
| IC75 | TC4001BP | | 14 | 7 |
| IC76 | TD62302P | | 9 | 8 |
| IC77 | TC4081BP | | 14 | 7 |
| IC78 | TC4025BP | | 14 | 7 |
| IC79 | TC4069UBP | | 14 | 7 |
| IC80 | TC4001BP | | 14 | 7 |
| IC81 | TC4081BP | | 14 | 7 |

SY-75 (1/4)

SY-75 (1/4) SYSTEM CONTROL)

S/N 18451 AND LATER (U/C)

NOTE:

| MARK | CHANGE INFORMATION | SERIAL NO. |
|---|---|---|
| | R471 4700 ADDED | VO 5600 U/C: 22351 - |
| | | -- J: 11101 - |
| ※1 | | VO 5630 AEP: 22341 - |
| | | -- UK: 12811 - |
| | | -- U/C: 10401 - |
| | | VO 5600 U/C: 28451 - |
| | | -- J: 11801 - |
| ※2 | R17 330 → 220 | VO 5630 AEP: 28441 - |
| | | -- UK: 13811 - |
| | | -- U/C: 10501 - |

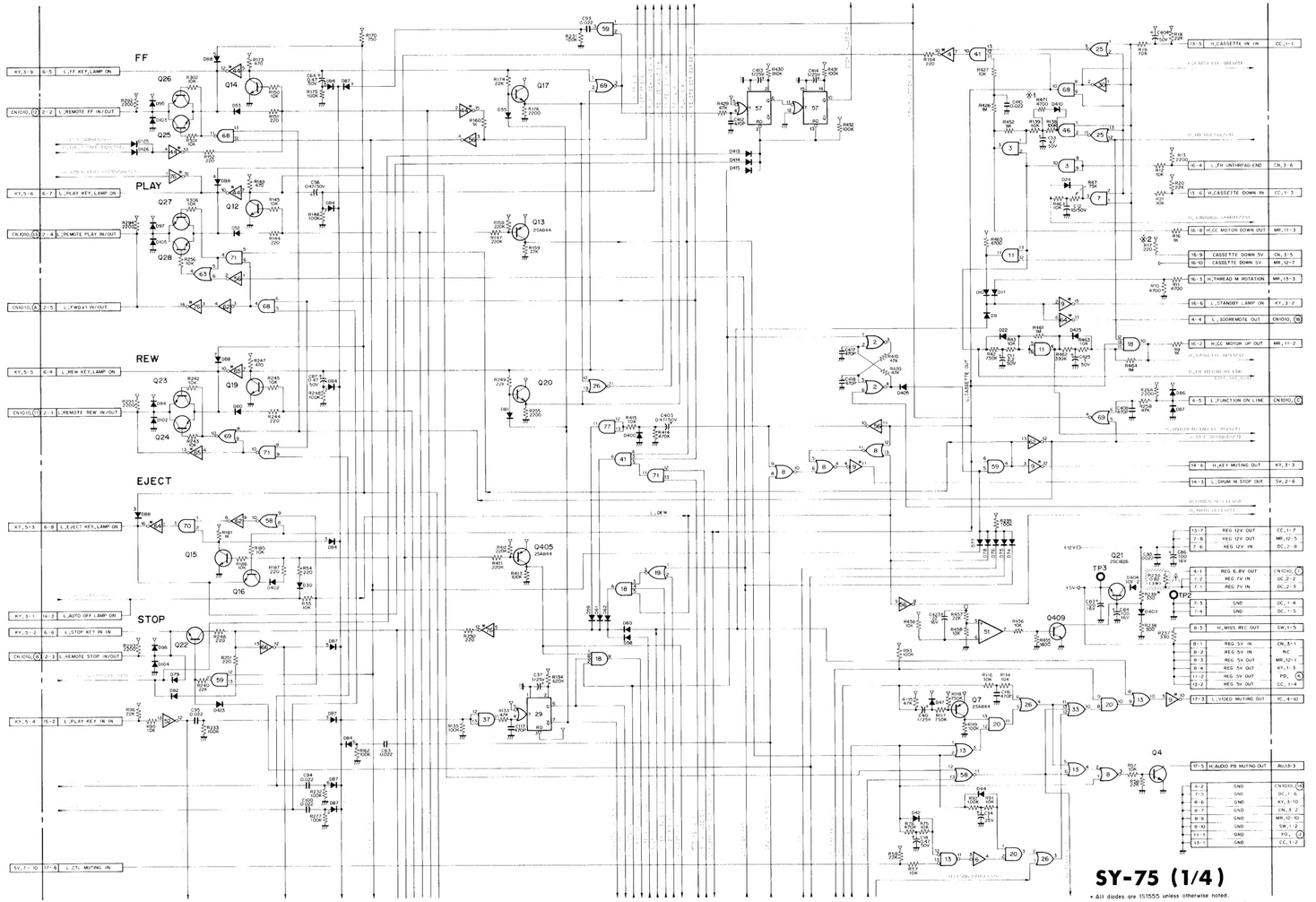


NOTE: The shaded and ⚠-marked components are critical to safety.
Replace only with same components as specified.

SY-75 (2/4) SY-75 (2/4)

## SY-75 (2/4) (SYSTEM CONTROL)

S/N 18451 AND LATER (U/C)

NOTE:

| MARK | CHANGE INFORMATION | SERIAL NO. |
|---|---|---|
| ※1 | C416 0.001 → 0.01<br>C426 (C517) 0.01 ADDED<br>C427 (C518) | VO 5600 U/C: 21851 ~<br>" J: 11101 ~<br>VO 5630 AEP: 22341 ~<br>" UK: 12811 ~<br>" U/C: 10301 ~ |

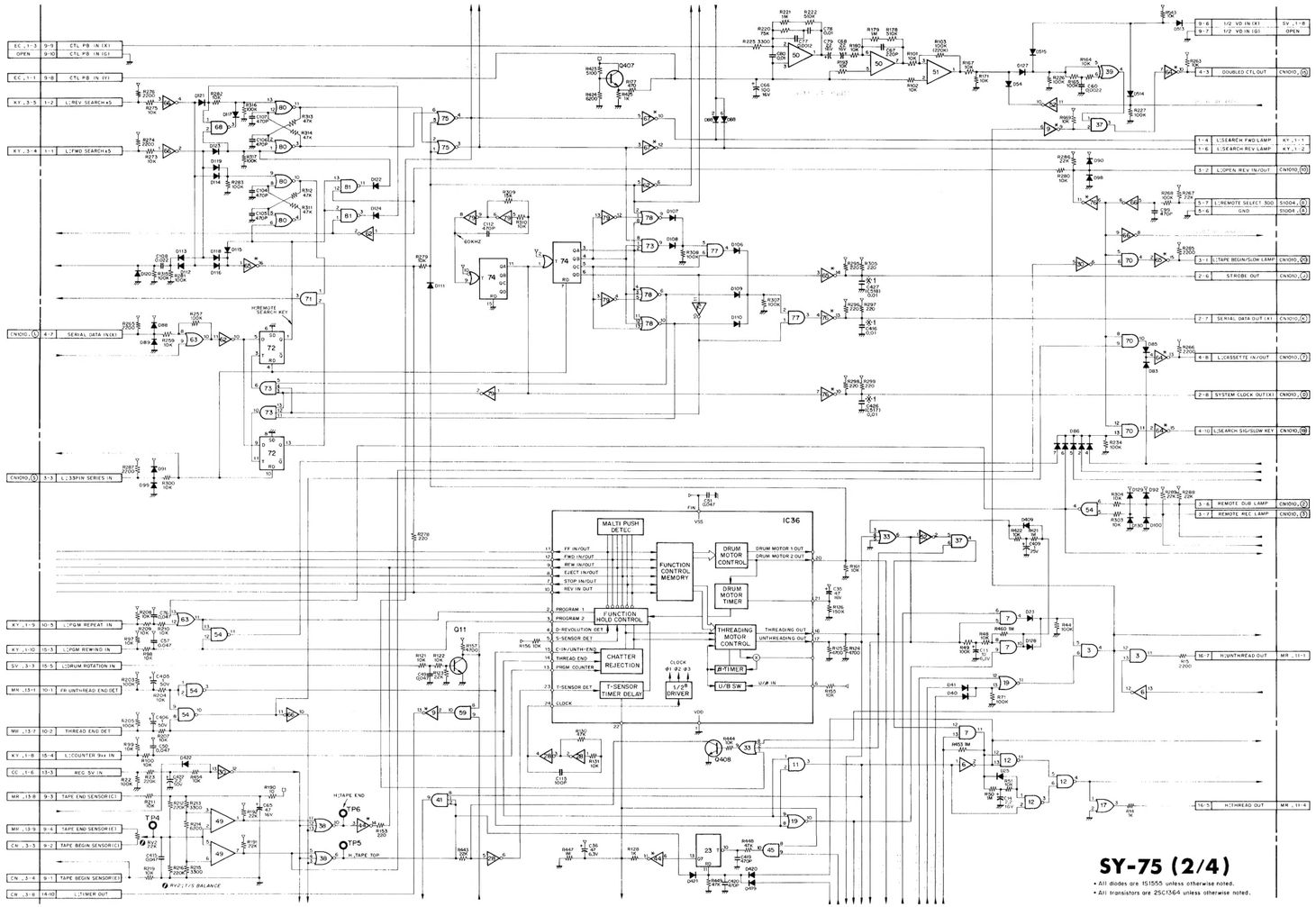


NOTE: **The shaded and ⚠ -marked components are critical to safety. Replace only with same components as specified.**

## SY-75 (3/4) (SYSTEM CONTROL)

S/N 18451 AND LATER (U/C)

NOTE:

| MARK | CHANGE INFORMATION | SERIAL NO. |
|---|---|---|
| ※1 | R49 (R54) 100 ADDED | VO 5600 U/C 21851 ~ 11101 ~<br>VO 5630 AEP 22341 ~ 11011 ~<br>~ U/C 10301 ~ |
| ※2 | CHANGED CIRCUIT | VO 5600 U/C 24951 ~ 12001 ~<br>VO 5630 AEP 31641 ~ 11011 ~<br>~ U/C 10601 ~ |
| ※3 | C31 1/25 → 1.5/20 | VO 5600 U/C 41001 ~ 12401 ~<br>VO 5630 AEP 39341 ~ 11111 ~<br>~ U/C 10301 ~ |

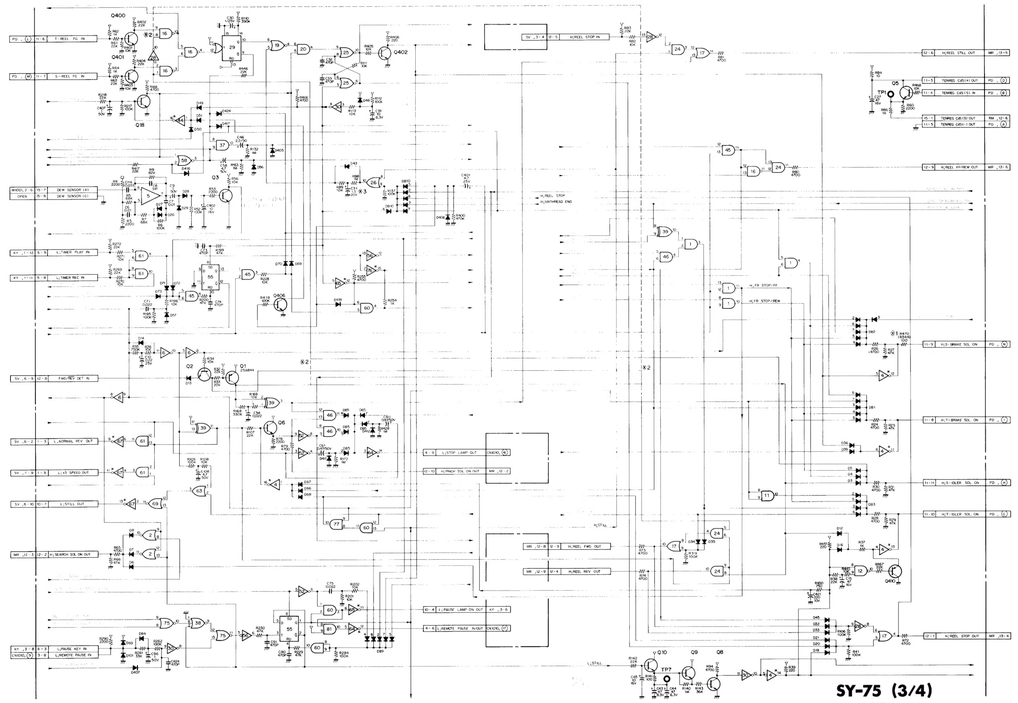

SY-75 (3/4)

- All diodes are 1S1555 unless otherwise noted.
- All transistors are 2SC1364 unless otherwise noted.







## SY-75 (4/4) (SYSTEM CONTROL)

S/N 18451 AND LATER (U/C)

NOTE:

| MARK | CHANGE INFORMATION | SERIAL NO. |
|---|---|---|
| ※1 | C512 0.47/50V ~ 0.01<br>R528 22K ~ 220K | VO 5600 U/C 21451 ~ 11001 ~<br>VO 5630 AEP 21341 ~ 11011 ~<br>~ U/C 10301 ~ |

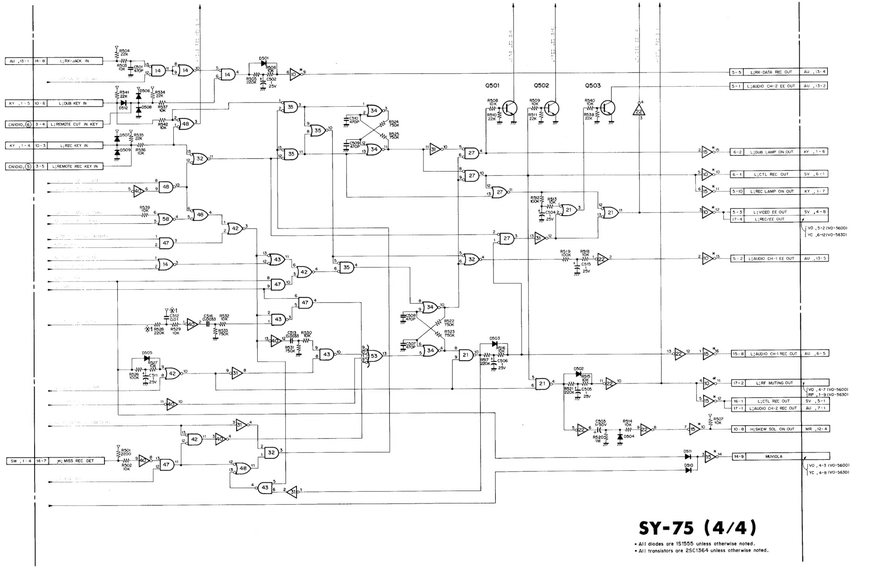

SY-75 (4/4)

- All diodes are 1S1555 unless otherwise noted.
- All transistors are 2SC1364 unless otherwise noted.

NOTE: The shaded and ⚠ marked components are critical to safety.
Replace only with same components as specified.